Gummi · Metall · Technik

AIRCRAFT COMPONENTS
MRO Parts

WE DEVELOP
YOU MAKE IT FLY

TABLE OF CONTENTS

GMT 3

TIE RODS 4 - 27

Airbus Standard (ABS) 6 - 27

→ ABS2180 6 - 21
→ ABS1187 22 - 24

EN Rods 26 - 46

→ EN4693 27 - 33
→ EN4694 34 - 40
→ EN4695 42 - 46

RUBBER METAL PARTS 48 - 69

Airbus Standard (ABS) 54 - 69

→ ABS0756 52 - 57
→ ABS0757 58 - 59
→ ABS1067 Shock Mount 60 - 62
→ ABS1186 Shock Mount 63
→ ABS1212 Shock Mount 64
→ ABS2146 Shock Mount (color coding) 65
→ ABS2147 Shock Mount 66
→ ABS2147 Shock Mount (with notch) 67

EN-Shock Mounts with Bushes 68 - 69

→ EN4841 69

CONTACT 71

PDF-CATALOGUE

qr.gmt-aerospace.com/
products/pdf-catalogue

FLIP-CATALOGUE

qr.gmt-aerospace.com/
products/flip-catalogue

WE DEVELOP
YOU MAKE IT FLY

Welcome to GMT GmbH and thank you for your interest in our company and products!

GMT is a well-known family-run company with more than 50 years of experience in the field of vibration, shock and noise control and employs more than 800 experts in design, development and production globally. With headquarters located in Bühl, Germany and numerous branches all over the world, GMT has an internationally acknowledged reputation for excellence across industrial sectors.

GMT's aircraft division is one of the newest facilities ensuring GMT is capable of complying with the very latest technical requirements and quality standards demanded by the Aerospace industry — GMT has proven to be a reliable partner of the aviation industry for more than 20 years. Focusing on the development and production of shock-absorbing rubber-metal parts as well as structure stabilizing elements, GMT's dedicated team of experienced developers meet the challenges and requirements of our customers on a daily basis.

Aircrafts incorporating GMT shock-absorbing products enjoy optimized levels of refinement and comfort. Not all aircrafts are fitted with GMT products, so there are certainly differences that you can hear and feel during flight.

Over recent years we developed several new components that have set the benchmark for aviation standards amongst respected airplane manufacturers. You will find many of these components in our catalogue of course.

We hope you will enjoy our new catalogue and look forward to supporting your requirements.

Gummi · Metall · Technik

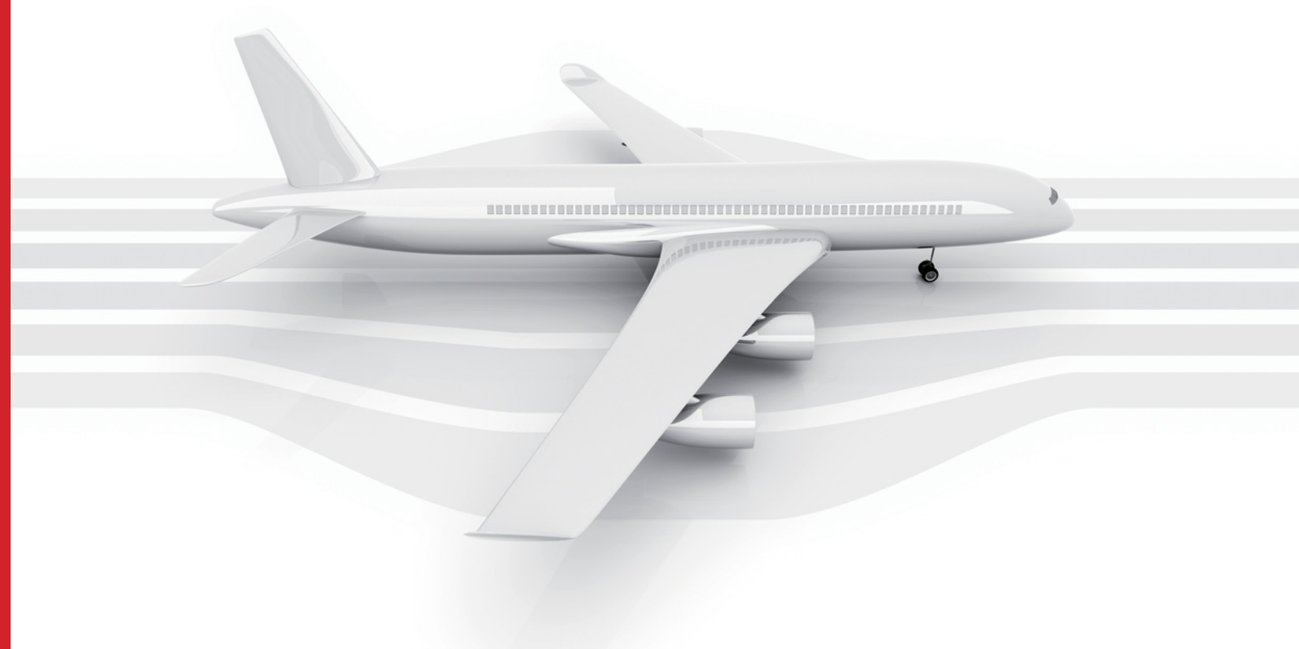

TIE RODS

AIRBUS STANDARD

TABLE OF CONTENTS

→ ABS2180 6 - 21
→ ABS1187 22 - 24

DESCRIPTION TO CFRP TIE RODS ABS2180

Mainly applicable for interior fittings and mounting of units in fuselage and cabin, also usable as structure part. Is used where components with long rod bodies and light weight are requested.

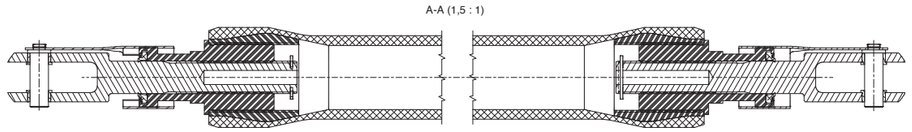

Advantage:

1. Simple and fast mounting by means of patented locking element.
2. Length adjustment in mounted condition is also possible with closed locking element.
3. Bolt for load transmission is integrated in the locking element (only for ABS1263).
4. Optional block available for locking element avoids that the longitudinal adjusted components are shifted unintended.
5. Integrated securing against hollowing avoids too far unscrew of the thread while mounting.
6. Threaded plastic inserts avoids problems with corrosion inside the thread.
7. Threaded plastic inserts assures thermic insulation between fuselage and cabin.
8. Threaded plastic inserts assures acoustic insulation between fuselage and cabin.
9. Integrated sealing in the threaded inserts avoids the penetration of the inner thread with fluids.
10. Fork end with titan bushings for flexible design by modification of the titan bushings with equal fork geometry.
11. Fork end with titan bushings avoids problems with corrosion for contact with carbon fibre or aluminium parts.
12. Light weight due to CFK Rod body.

Designation

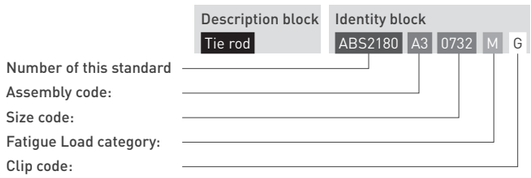

COMPONENTS OF TIE RODS ABS2180

Components and their function

Rod end

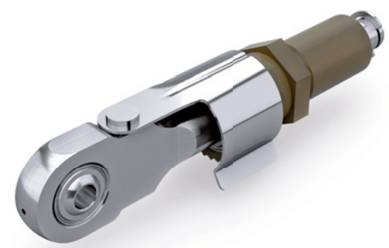

Fork end

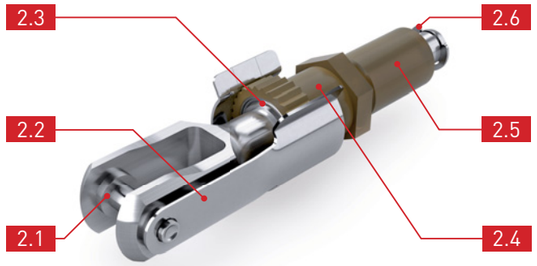

2.1

Titanium bushes

- Aids better load transmission.
- Higher surface pressure possible.
- Through change of geometry
- (boring/width) modular structure with same geometry of fork possible.

2.2

Locking clip (Clip code G)

Quick-locking mechanism for assembly by hand. Serves as anti-twist plate and aids in transmission of loads.

OR

2.2

closed

open

Locking clip with retaining clamp (Clip code H)

The locking clip with retaining clamp serves for locking of rotation and consequently prevents from unintentional variation of length of the Tie Rod after the final assembly.

2.3

Rubber ring

Prevents penetration of water and dust into rod assembly.

2.4

Spring

Links threads of threaded sleeve and fork end against each other and prevents any thread play.

2.5

Plastic insert

Aids in transmission of loads. Plastic prevents corrosion in thread and acts as an insulator.

2.6

Safety ring

Prevents and controls too far turning off the thread.

TIE RODS ACC. TO ABS2180 GMT-NO. 650376..

Traceparts

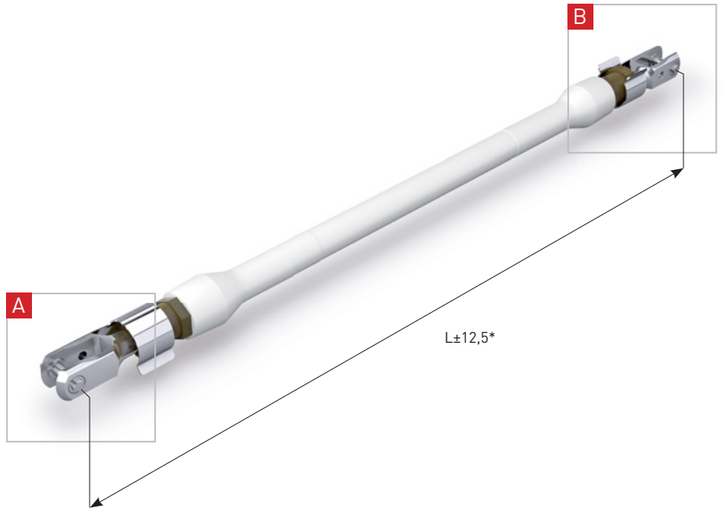

View A

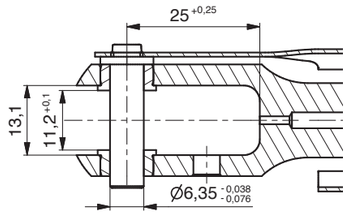

View B

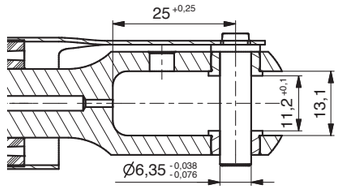

ABS-no.	GMT-no.	Ultimate tension load [kN]	Ultimate compression load [kN]	Weight [g]	Rod body outer Ø [mm]	Length L [mm]	Material Rod body	Material Ends
ABS2180 A3 0500 LG	65037601	18	4,5	229	19	500	CFRP	AL
ABS2180 A3 0600 LG	65037604	18	4,5	240	19	600	CFRP	AL

TIE RODS ACC. TO ABS2180 GMT-NO. 650377..

Traceparts

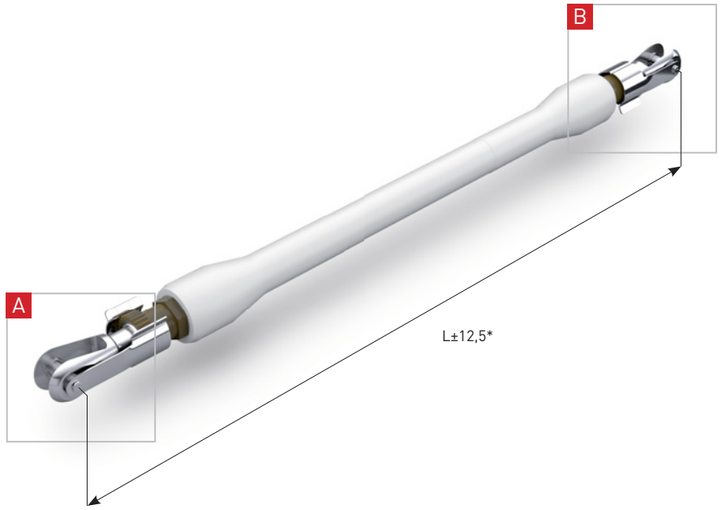

View A

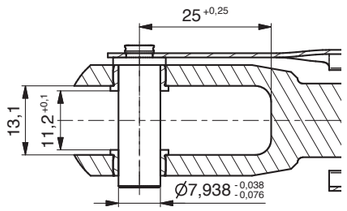

View B

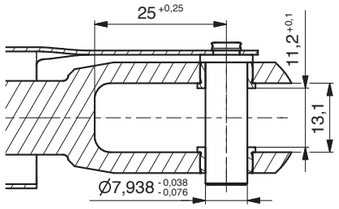

* adjustable range [mm]

ABS-no.	GMT-no.	Ultimate tension load [kN]	Ultimate compression load [kN]	Weight [g]	Rod body outer Ø [mm]	Length L [mm]	Material Rod body	Material Ends
ABS2180 B3 0500 MG	65037702	30	6	303	23,3	500	CFRP	AL
ABS2180 B3 0732 MG	65037701	30	6	339	23,3	732	CFRP	AL
ABS2180 B3 0780 MG	65037703	30	6	346	23,3	780	CFRP	AL

TIE RODS ACC. TO ABS2180 GMT-NO. 650378..

Traceparts

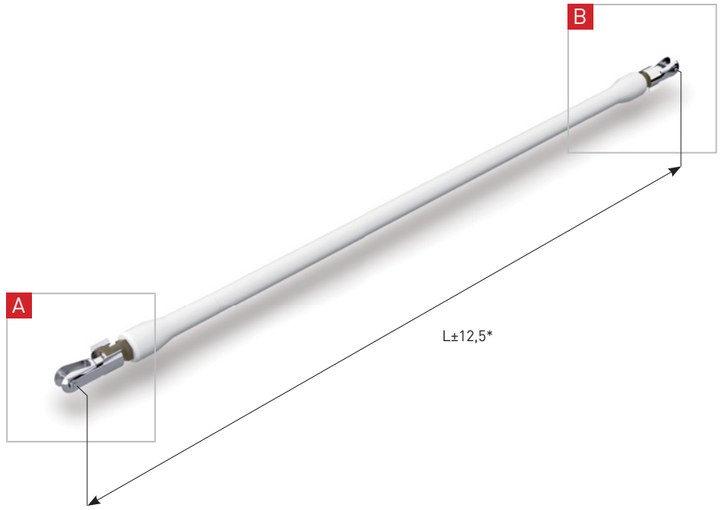

View A

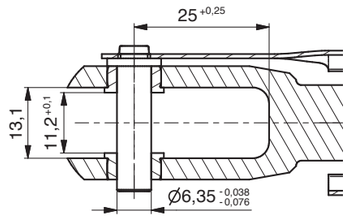

View B

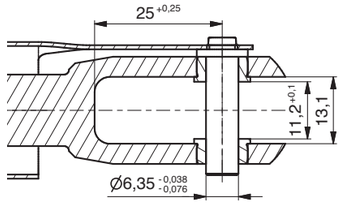

* adjustable range [mm]

ABS-no.	GMT-no.	Ultimate tension load [kN]	Ultimate compression load [kN]	Weight [g]	Rod body outer Ø [mm]	Length L [mm]	Material Rod body	Material Ends
ABS2180 B4 1000 HG	65037804	18	3,5	418	24,3	1000	CFRP	AL
ABS2180 B4 1233 HG	65037803	18	3,5	468	24,3	1233	CFRP	AL

TIE RODS ACC. TO ABS2180 GMT-NO. 650379..

Traceparts

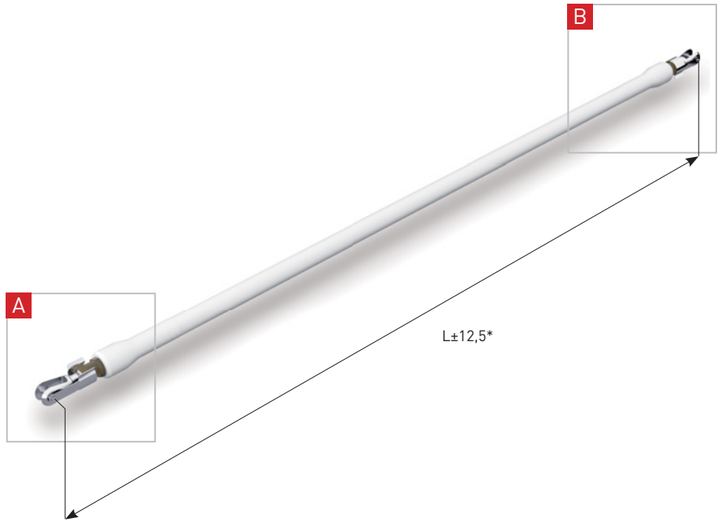

View A

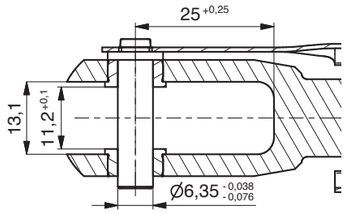

View B

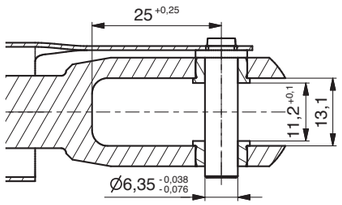

* adjustable range [mm]

ABS-no.	GMT-no.	Ultimate tension load [kN]	Ultimate compression load [kN]	Weight [g]	Rod body outer Ø [mm]	Length L [mm]	Material Rod body	Material Ends
ABS2180 B5 1235 LG	65037903	18	4,5	577	26,1	1235	CFRP	AL
ABS2180 B5 1280 LG	65037902	18	4,5	592	26,1	1280	CFRP	AL
ABS2180 B5 1329 LG	65037901	18	4,5	607	26,1	1329	CFRP	AL
ABS2180 B5 1450 LG	65037904	18	4,5	647	26,1	1450	CFRP	AL

TIE RODS ACC. TO ABS2180 GMT-NO. 650380..

Traceparts

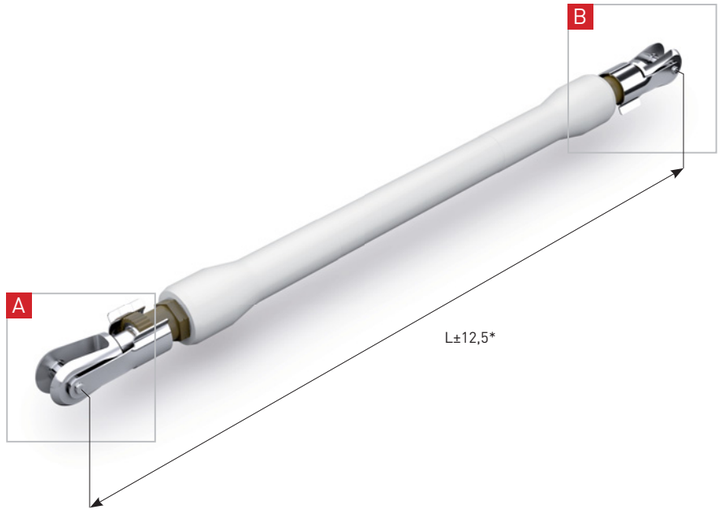

View A

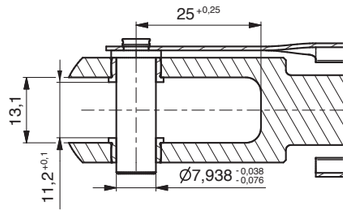

View B

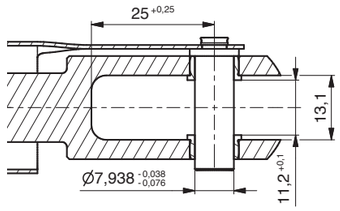

* adjustable range [mm]

ABS-no.	GMT-no.	Ultimate tension load [kN]	Ultimate compression load [kN]	Weight [g]	Rod body outer Ø [mm]	Length L [mm]	Material Rod body	Material Ends
ABS2180 B6 0500 KG	65038003	40,5	23	360	26,1	500	CFRP	AL
ABS2180 B6 0606 KG	65038001	40,5	23	394	26,1	606	CFRP	AL
ABS2180 B6 0624 KG	65038002	40,5	23	400	26,1	624	CFRP	AL
ABS2180 B6 0650 KG	65038004	40,5	23	409	26,1	650	CFRP	AL

TIE RODS ACC. TO ABS2180 GMT-NO. 650381..

Traceparts

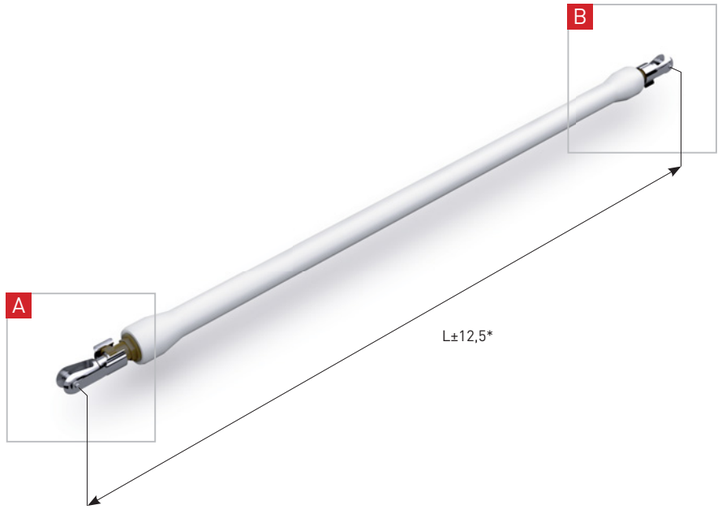

View A

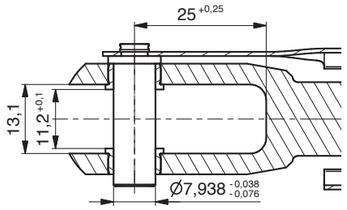

View B

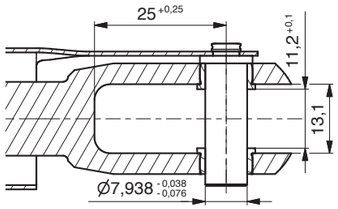

* adjustable range [mm]

ABS-no.	GMT-no.	Ultimate tension load [kN]	Ultimate compression load [kN]	Weight [g]	Rod body outer Ø [mm]	Length L [mm]	Material Rod body	Material Ends
ABS2180 C2 1000 MG	65038104	30	6	477	31	1000	CFRP	AL
ABS2180 C2 1225 MG	65038105	30	6	529	31	1225	CFRP	AL
ABS2180 C2 1255 MG	65038106	30	6	536	31	1255	CFRP	AL
ABS2180 C2 1280 MG	65038107	30	6	542	31	1280	CFRP	AL
ABS2180 C2 1303 MG	65038101	30	6	546	31	1303	CFRP	AL
ABS2180 C2 1322 MG	65038102	30	6	551	31	1322	CFRP	AL
ABS2180 C2 1334 MG	65038103	30	6	553	31	1334	CFRP	AL

TIE RODS ACC. TO ABS2180 GMT-NO. 650382..

Traceparts

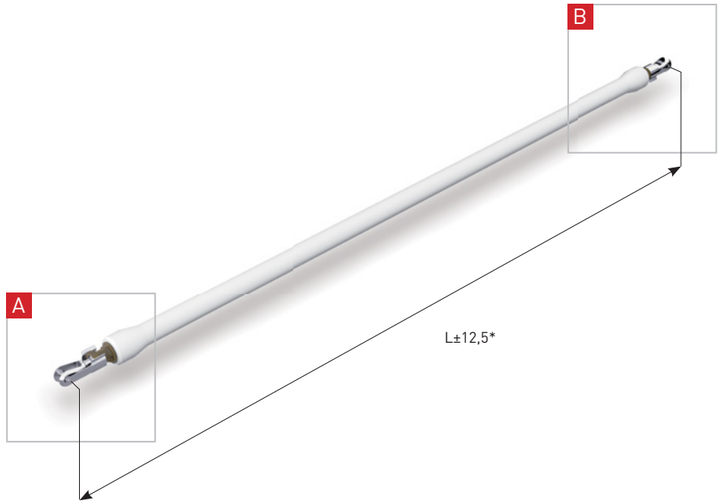

View A

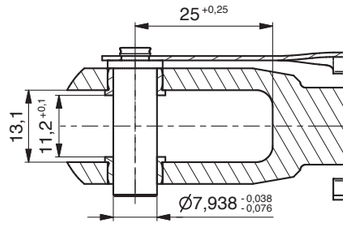

View B

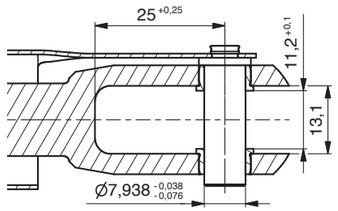

* adjustable range [mm]

ABS-no.	GMT-no.	Ultimate tension load [kN]	Ultimate compression load [kN]	Weight [g]	Rod body outer Ø [mm]	Length L [mm]	Material Rod body	Material Ends
ABS2180 C3 1341 MG	65038201	30	6	597	31,5	1341	CFRP	AL
ABS2180 C3 1385 MG	65038202	30	6	609	31,5	1385	CFRP	AL
ABS2180 C3 1426 MG	65038203	30	6	620	31,5	1426	CFRP	AL
ABS2180 C3 1450 MG	65038204	30	6	626	31,5	1450	CFRP	AL

TIE RODS ACC. TO ABS2180 GMT-NO. 650383..

Traceparts

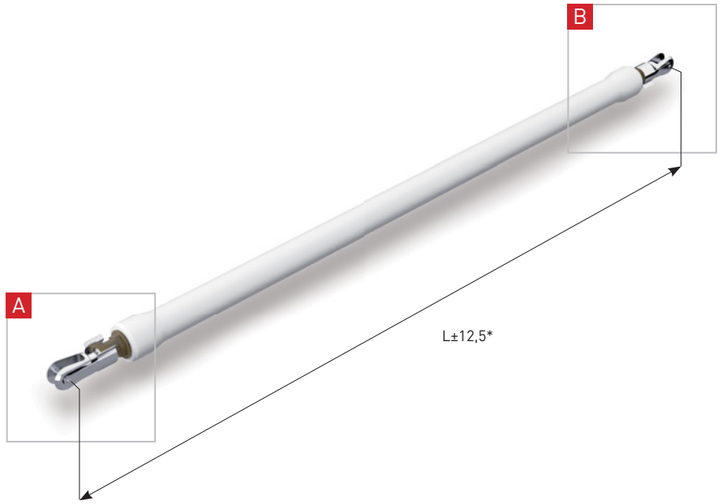

View A

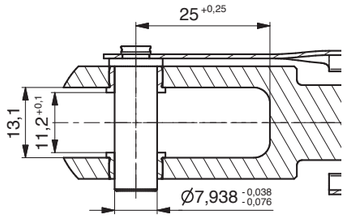

View B

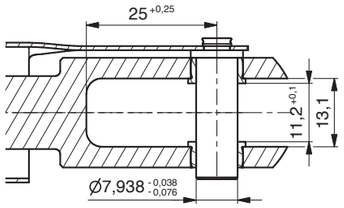

* adjustable range [mm]

ABS-no.	GMT-no.	Ultimate tension load [kN]	Ultimate compression load [kN]	Weight [g]	Rod body outer Ø [mm]	Length L [mm]	Material Rod body	Material Ends
ABS2180 C5 1000 KG	65038303	40,5	23	771	35,5	1000	CFRP	AL
ABS2180 C5 1225 KG	65038301	40,5	23	906	35,5	1225	CFRP	AL
ABS2180 C5 1255 KG	65038302	40,5	23	923	35,5	1255	CFRP	AL

TIE RODS ACC. TO ABS2180 GMT-NO. 650384..

Traceparts

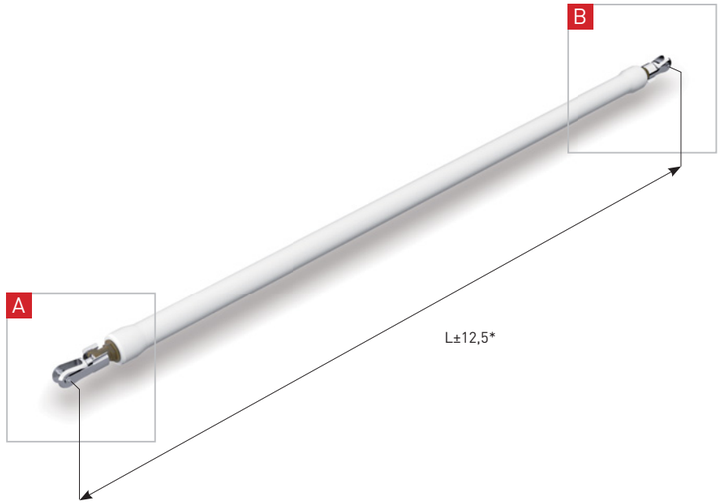

View A

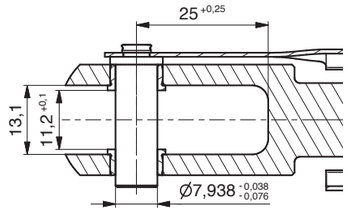

View B

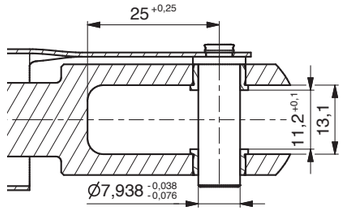

* adjustable range [mm]

ABS-no.	GMT-no.	Ultimate tension load [kN]	Ultimate compression load [kN]	Weight [g]	Rod body outer Ø [mm]	Length L [mm]	Material Rod body	Material Ends
ABS2180 C6 1260 KG	65038403	40,5	23	972	36	1260	CFRP	AL
ABS2180 C6 1280 KG	65038401	40,5	23	984	36	1280	CFRP	AL
ABS2180 C6 1304 KG	65038402	40,5	23	1000	36	1304	CFRP	AL

TIE RODS ACC. TO ABS2180 GMT-NO. 650385..

Traceparts

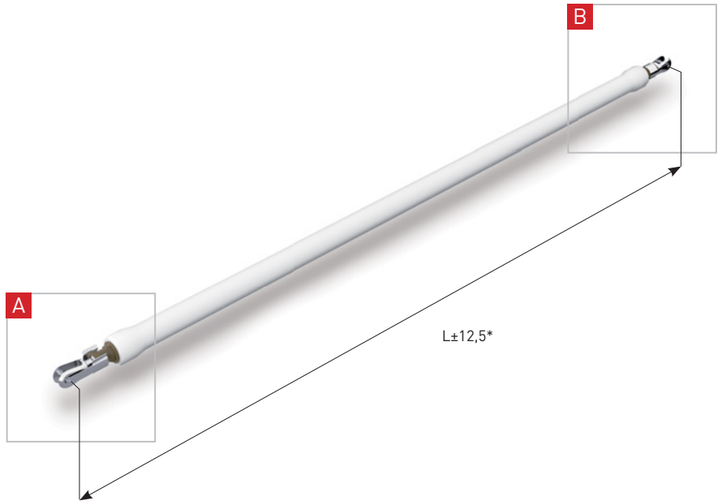

View A

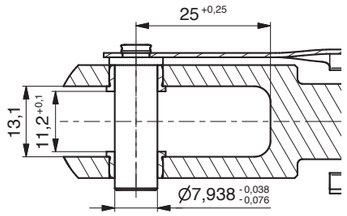

View B

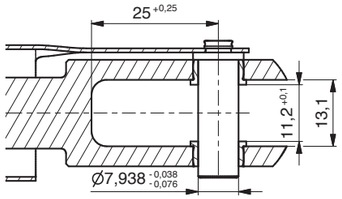

* adjustable range [mm]

ABS-no.	GMT-no.	Ultimate tension load [kN]	Ultimate compression load [kN]	Weight [g]	Rod body outer Ø [mm]	Length L [mm]	Material Rod body	Material Ends
ABS2180 C7 1310 KG	65038503	40,5	23	1040	36	1310	CFRP	AL
ABS2180 C7 1341 KG	65038501	40,5	23	1061	36	1341	CFRP	AL
ABS2180 C7 1334 KG	65038502	40,5	23	1056	36	1334	CFRP	AL
ABS2180 C7 1350 KG	65038504	40,5	23	1067	36	1350	CFRP	AL

TIE RODS ACC. TO ABS2180 GMT-NO. 650386..

Traceparts

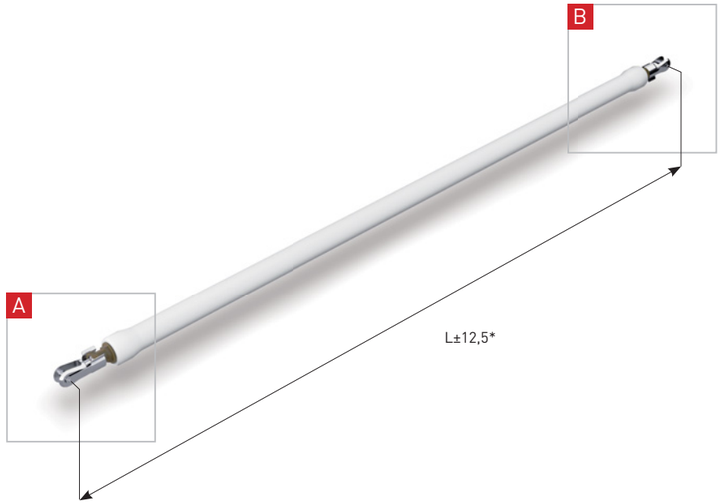

View A

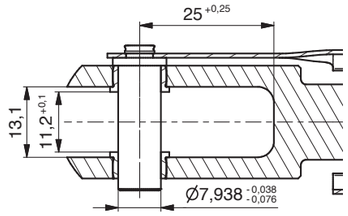

View B

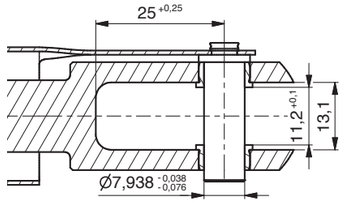

* adjustable range [mm]

ABS-no.	GMT-no.	Ultimate tension load [kN]	Ultimate compression load [kN]	Weight [g]	Rod body outer Ø [mm]	Length L [mm]	Material Rod body	Material Ends
ABS2180 C8 1355 KG	65038602	40,5	23	1179	36	1355	CFRP	AL
ABS2180 C8 1430 KG	65038601	40,5	23	1237	36	1430	CFRP	AL

TIE RODS ACC. TO ABS2180 GMT-NO. 650427..

Traceparts

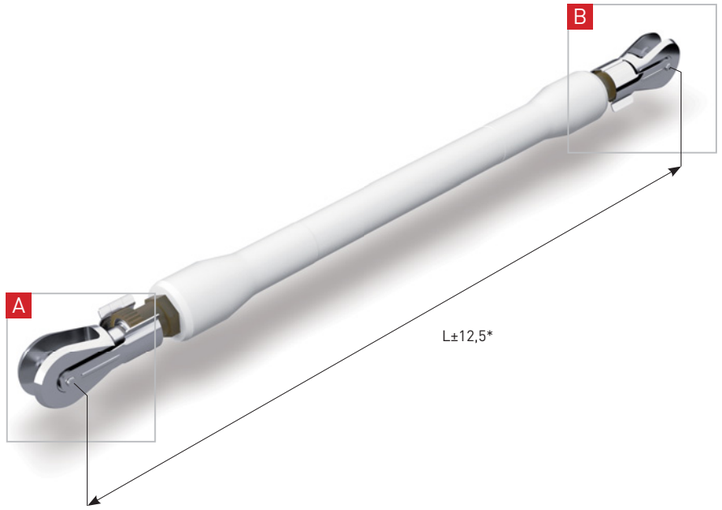

View A

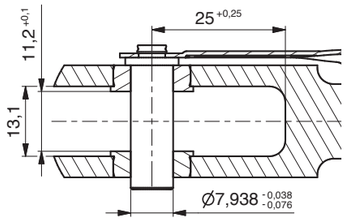

View B

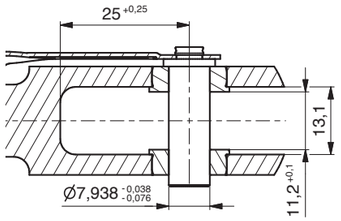

* adjustable range [mm]

ABS-no.	GMT-no.	Ultimate tension load [kN]	Ultimate compression load [kN]	Weight [g]	Rod body outer Ø [mm]	Length L [mm]	Material Rod body	Material Ends
ABS2180 B7 0500 PG	65042703	50	23	401	26,1	500	CFRP	AL
ABS2180 B7 0606 PG	65042701	50	23	435	26,1	606	CFRP	AL
ABS2180 B7 0624 PG	65042702	50	23	441	26,1	624	CFRP	AL
ABS2180 B7 0650 PG	65042704	50	23	449	26,1	650	CFRP	AL

TIE RODS ACC. TO ABS2180 GMT-NO. 650428..

Traceparts

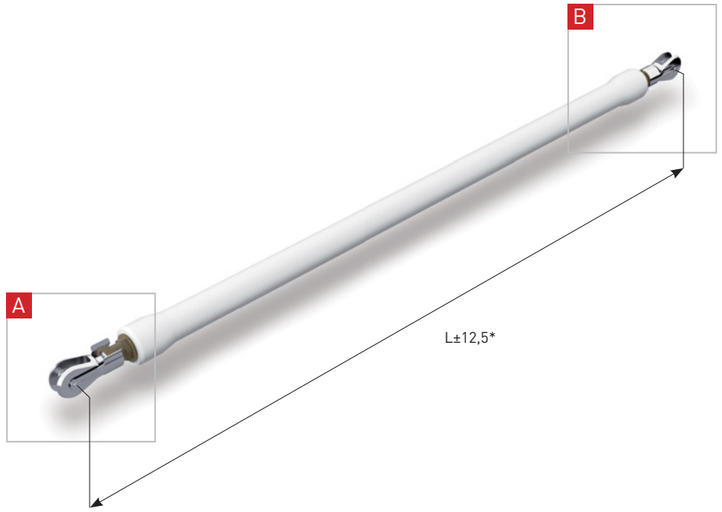

View A

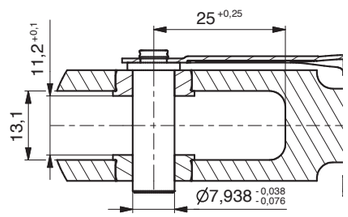

View B

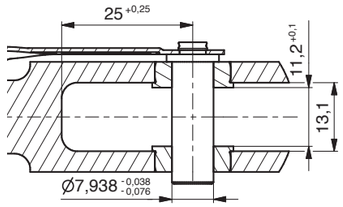

* adjustable range [mm]

ABS-no.	GMT-no.	Ultimate tension load [kN]	Ultimate compression load [kN]	Weight [g]	Rod body outer Ø [mm]	Length L [mm]	Material Rod body	Material Ends
ABS2180 E1 1000 PG	65042803	50	23	816	35,5	1000	CFRP	AL
ABS2180 E1 1225 PG	65042801	50	23	950	35,5	1225	CFRP	AL
ABS2180 E1 1255 PG	65042802	50	23	968	35,5	1255	CFRP	AL

DESCRIPTION TO TIE RODS ABS1187

Applicable for interior fittings and mounting of units in fuselage and cabin, also usable as structure part. Is used where short components are requested.

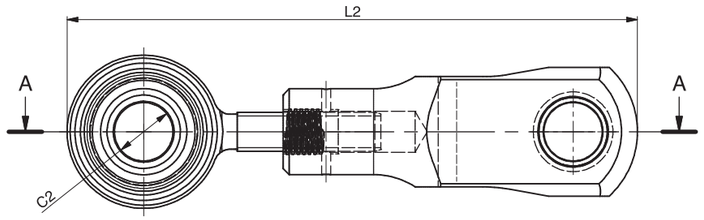

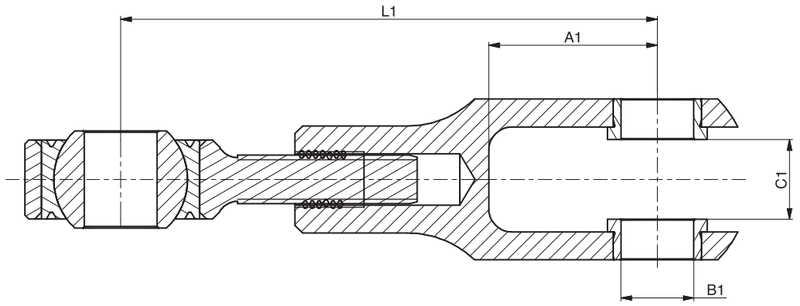

Advantage:

1. Bolt for load transmission is integrated in the locking element.
2. No longitudinal locking due to helicoil thread insert with screw lock is used.
3. Fork end with titan bushings for flexible design by modification of the titan bushings with equal fork geometry.
4. Fork end with titan bushings avoids problems with corrosion for contact with carbon fibre or aluminium parts.

Designation

Description block	Identity block					
Tie rod	ABS1187	A	6120	G	P	X

Number of this standard
Assembly code:
Size code:
Type code:
Fatigue Load category:
Diameter code:

COMPONENTS OF TIE RODS ABS1187

Components and their function

Rod end

Fork end

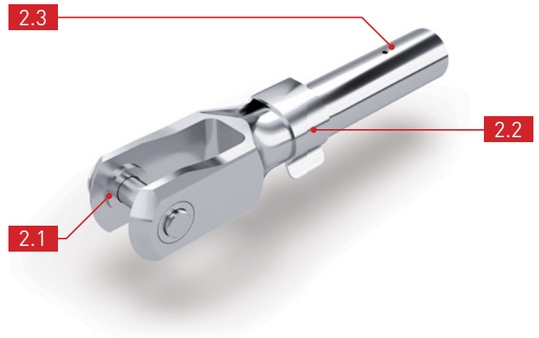

2.1

Bushes

- Aids better load transmission.
- Higher surface pressure possible.
- Through change of geometry
- (boring/width) modular structure with same geometry of fork possible.

2.3

Threaded insert with screw locking

Links threads of threaded sleeve and fork end against each other and prevents any thread paly.

2.2

Locking clip

Quick-locking mechanism for assembly by hand. Serves as anti-twist plate and aids in transmission of loads.

TIE RODS ACC. TO ABS1187 GMT-NO. 650374.., 650019..

Traceparts

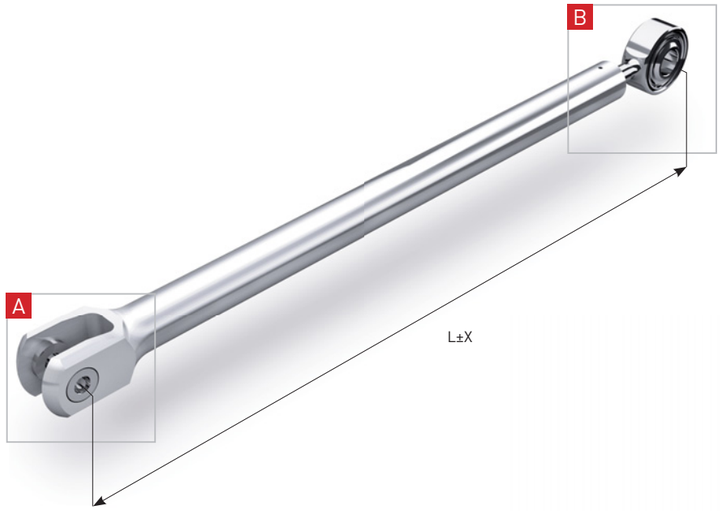

View A

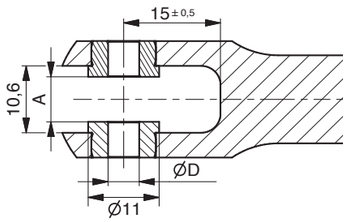

View B

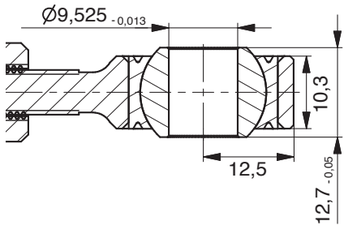

ABS-no.	GMT-no.	Adjustable range X [mm]	ØD [mm] -0,038 -0,076	A [mm] +0,1 0	Ultimate tension load [kN]	Ultimate compression load [kN]	Weight [g]	Rod body outer Ø [mm]	Length L [mm]	Material Fork End A	Material Rod End B
ABS1187 A 5120 GPX	65001906	+7,0 -3,5	4,83	7,15	14	17	59	14	51,2	AL	CRES
ABS1187 A 5120 GPY	65001902	+7,0 -3,5	6,35	8,72	14	17	58	14	51,2	AL	CRES
ABS1187 A 5120 GKX	65037402	+7,0 -3,5	4,83	7,15	14	14	59	14	51,2	AL	CRES
ABS1187 A 6120 GPX	65001907	±7,0	4,83	7,15	14	17	61	14	61,2	AL	CRES
ABS1187 A 6120 GPY	65001901	±7,0	6,35	8,72	14	17	60	14	61,2	AL	CRES
ABS1187 A 0900 GKX	65037401	±7,0	4,83	7,15	14	14	72	14	90	AL	CRES
ABS1187 A 2500 GKX	65037403	±7,0	4,83	7,15	14	14	132	14	250	AL	CRES

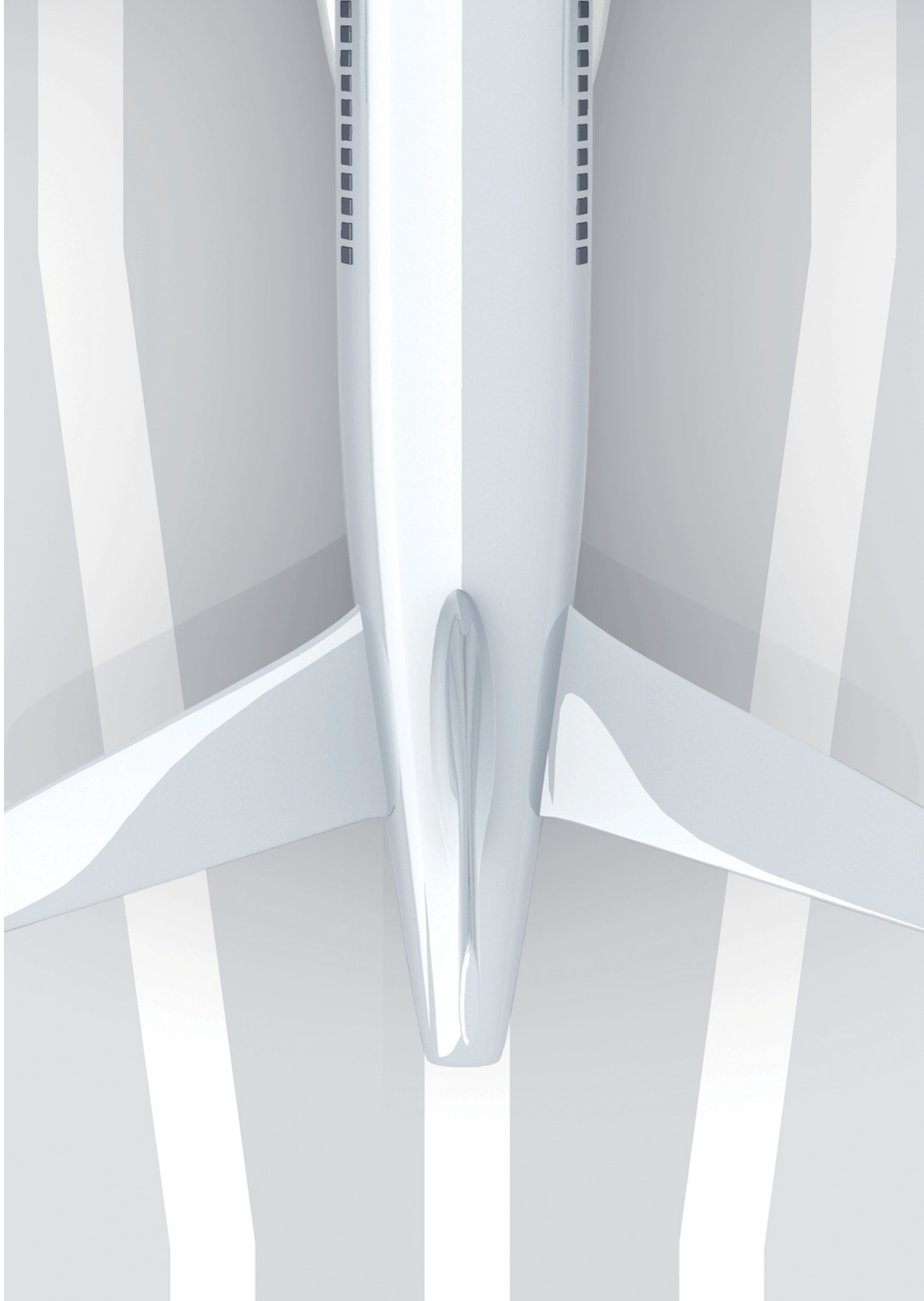

EN TIE RODS

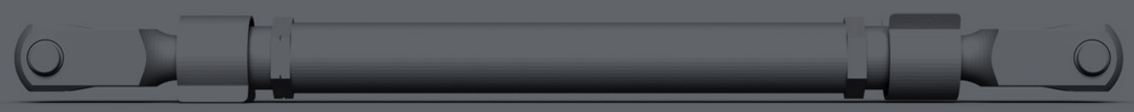

TABLE OF CONTENTS

→ EN4693 27 - 33
→ EN4694 34 - 40
→ EN4695 42 - 46

DESCRIPTION TO TIE RODS EN4693

The Tie Rods EN4693 are patented with following patents.

Patented design

Figure 1 Assembly code A

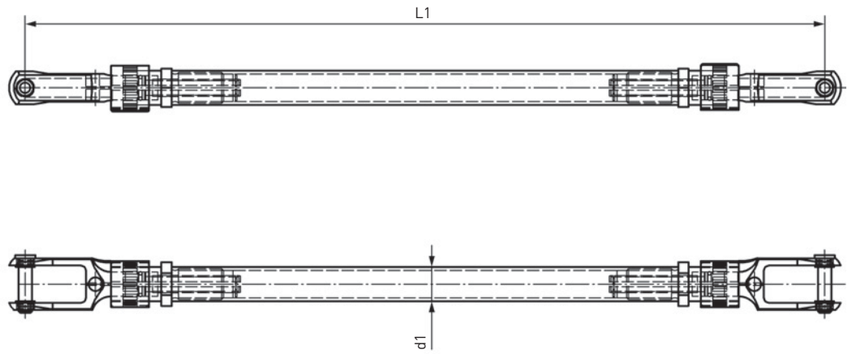

Figure 2 Assembly code B

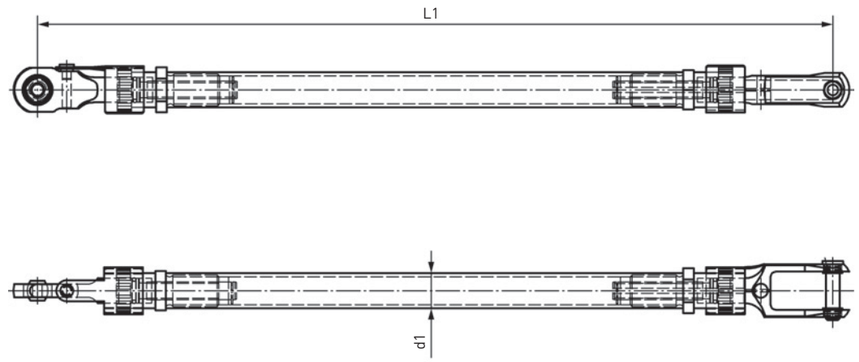

Figure 3 Assembly code C

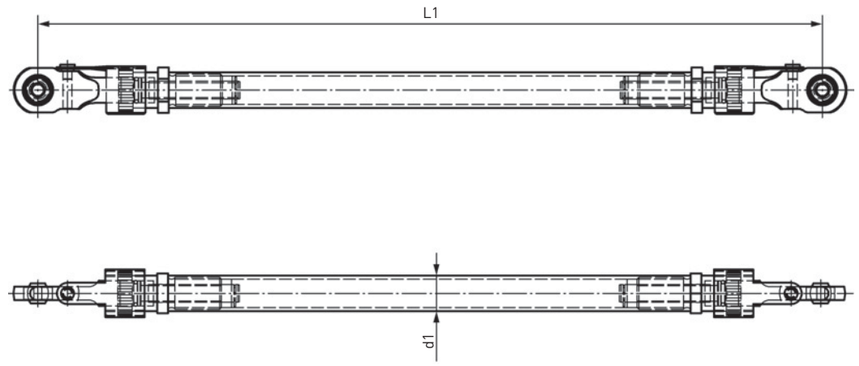

Dimensions:

- Diameter d1= Ø 20mm
- Possible Length L1=250-900mm in 5mm Steps, Adjustable range ±12,7mm,
- Example Length code: Length code 250mm = 0250

Material:

- Material Code A = Fork, eye ends out of Aluminum (WL 3.1354), Rod body out of Aluminum (WL 3.1354)
- Material Code B = Fork, eye ends out of Stainless steel (WL 1.4548.4), Rod body out of Aluminum (WL 3.1354)
- Material Code A and B: Bushing in fork ends out of Titanium alloy 3.7165 according to EN 3311

Surface Finish:

- Rod body: Anodized according to LN 9368-4-2000, coating according to LN 9368-7-5023 and according to LN 9368-7-5106
- Fork, eye ends Material Code A: Anodized according to LN 9368-4-2001
- Fork, eye ends Material Code B: Passivated according to ISO 8075

Tension loads:

- Material Code A and B
- Ultimate load= 20kN
- Limit load = 13,3kN

Compression loads:

Compression Loads Material Code A

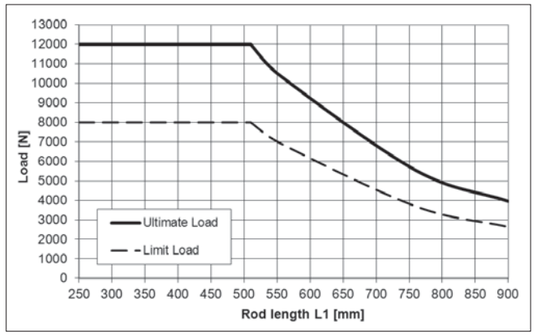

Compression Loads Material Code B

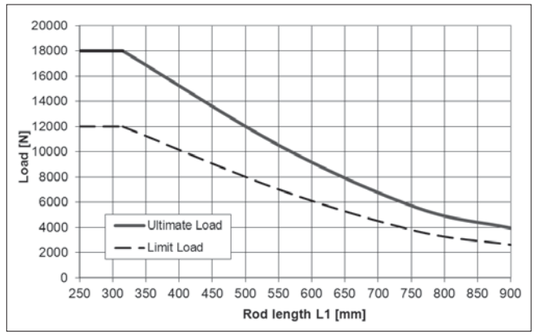

Fatigue loads:

Fatigue loads see EN4691

Size codes Fork ends:

Fork end with Clip code A

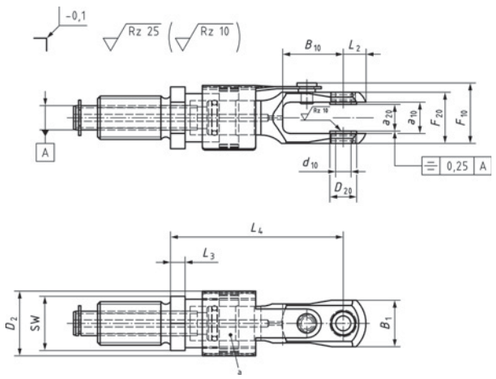

Fork end with Clip code A (only for size code 10)

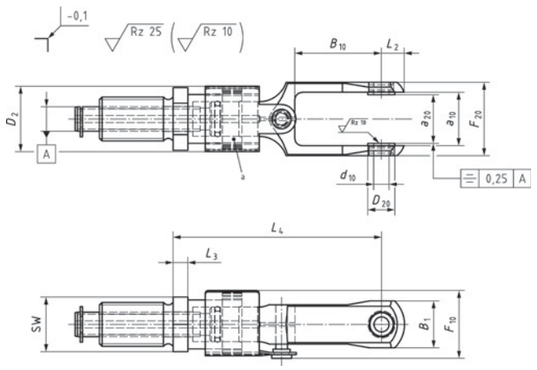

Fork end with Clip code B

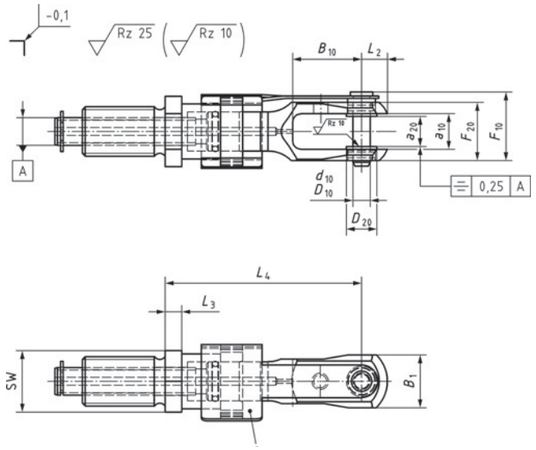

Fork end with Clip code B (R)light

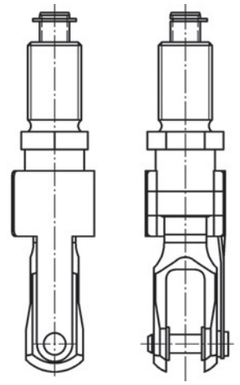

Fork end with Clip code B (L)eft

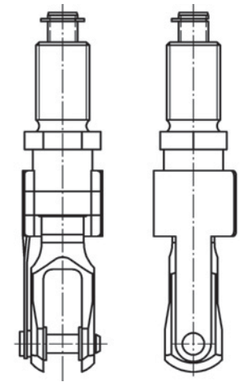

Table 3 Size codes and dimensions fork ends material code A and B, clip code A

all dimensions in mm

Size code	Clip code	a_{10}	a_{20} +0,1 0	B_1	B_{10} ±0,5	Ø D_2	Ø d_{10} 0 -0,013	Ø D_{20}	F_{10}	F_{20}	L_1	L_2	L_3	L_4	SW Hexagon spanner flat	Thread	Mass [g] ± 3 % Material code A	Mass [g] ± 3 % Material code B
01	A	13,1	8,72	19	25	26,8	6,350	11	24,8	21	250-900	9,5	6	71,0	22,2	RH	73	138
																LH		
02		11,0	9,10													RH	75	146
																LH		
03		13,1	11,1													RH	72	137
																LH		
04			11,2													RH	72	137
																LH		
05							7,938									RH	71	136
																LH		
06					30									76,0		RH	74	147
																LH		
07							6,350									RH	75	148
																LH		
08		13,7	12,7	21			9,525	13				10,3				RH	74	145
																LH		
09		16,1	14,2	19	25		6,350	11	27,8	24		9,5		71,0		RH	72	137
																LH		
10		22,5	20,6		35		7,938		28,3	30,4	270-900			84,4		RH	79	163
																LH		

Table 4 Size codes and dimensions fork ends material code A and B, clip code B

all dimensions in mm

Size code a*	Size code b**	Clip code	a_{10}	a_{20} +0,1 0	B_1	B_{10} ±0,5	Ø D_2	Ø d_{10} 0 -0,013	Ø D_{10} -0,038 -0,076	Ø D_{20}	F_{10}	F_{20}	L_1	L_2	L_3	L_4	SW Hexagon spanner flat	Thread	Mass [g] ± 3 % Material code A	Mass [g] ± 3 % Material code B
21	(31)	B	13,1	8,72	19	25	26,8	6,350	6,350	11	24,8	21	250-900	9,5	8	71,0	22,2	RH	80	145
																		LH		
22	(32)		11,0	9,10														RH	82	153
																		LH		
23	(33)		13,1	11,1														RH	79	144
																		LH		
24	(34)			11,2														RH	79	144
																		LH		
25	(35)							7,938	7,938									RH	81	146
																		LH		
26	(36)					30										76,0		RH	86	158
																		LH		
27	(37)							6,350	6,350									RH	83	156
																		LH		
28	(38)		13,7	12,7	21			9,525	9,525	13								RH	89	160
																		LH		
29	(39)		16,1	14,2	19	25		6,350	6,350	11	27,8	24		9,5		71,0		RH	79	144
																		LH		
30	(40)		22,5	20,6		35		7,938	7,938		28,3	30,4	270-900			84,4		RH	93	177
																		LH		

*a: Size code for fork end with locking clip R **b: Size code for fork end with locking clip L

Size codes eye ends:

Eye end with Clip code A

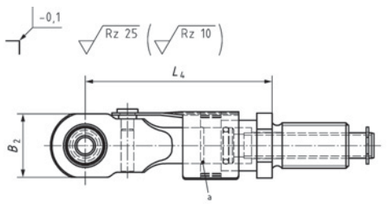

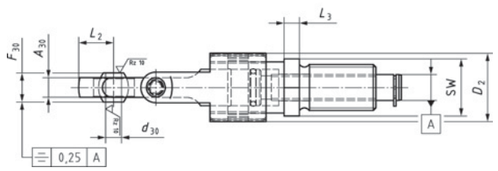

Table 5 Size codes and dimensions eye ends material code A and B, clip code A

all dimensions in mm

Size code	A_{30}	B_2	Ø D_2	Ø d_{30} 0 -0,013	F_{30} 0 -0,05	L_1	L_2	L_3	L_4	SW Hexagon spanner flat	Thread	Mass [g] ± 3 % Material code A	Mass [g] ± 3 % Material code B
41	8,31	25	26,8	6,350	11,1	250-900	13,6	8	72,4	22,22	RH	85	157
											LH		
42				7,938							RH	86	156
											LH		
43		30					16,1				RH	93	177
											LH		
44	10,31			9,525	12,7						RH	101	181
											LH		

Mass calculation:

For mass calculation, see Equation (1) and Equation (2).

(1) $h = L_1 - L_{4r} - L_{4l}$
(2) $m_t = 0{,}3054\ \text{g/mm} \times h + m_r + m_l$

h is the length of rod body (mm);
L_1 is the length of tie rod (mm), see Figure 1, Figure 2 and Figure 3;
L_{4r} is the length of fork / eye end – right side (mm), see Table 3, Table 4 and Table 5;
L_{4l} is the length of fork / eye end – left side (mm), see Table 3, Table 4 and Table 5;
m_r is the mass of fork / eye end – right side (g), see Table 3, Table 4 and Table 5;
m_l is the mass of fork / eye end – left side (g), see Table 3, Table 4 and Table 5;
m_t is total mass (g).

Designation

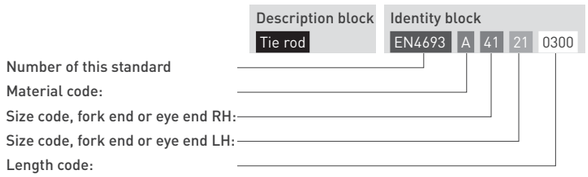

Technical Specification see EN4691

COMPONENTS OF TIE RODS EN4693

Components and their function

Rod end

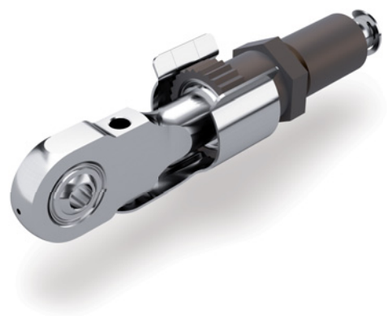

Fork end

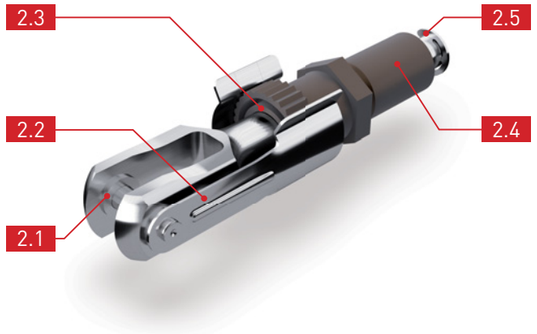

2.1

Bushes

- Aids better load transmission.
- Higher surface pressure possible.
- Through change of geometry
- (boring/width) modular structure with same geometry of fork possible.

2.4

Plastic insert

Aids in transmission of loads. Plastic prevents corrosion in thread and acts as an insulator.

2.2

Locking clip

Quick-locking mechanism for assembly by hand. Serves as anti-twist plate and aids in transmission of loads.

2.5

Safety ring

Prevents and controls too far turning off the thread.

2.3

Rubber ring

Prevents penetration of water and dust into rod assembly.

TIE ROD ACC. TO EN4693 GMT-NO. EN4693A22220310

Traceparts

Patented design

Figure 1 Assembly code D

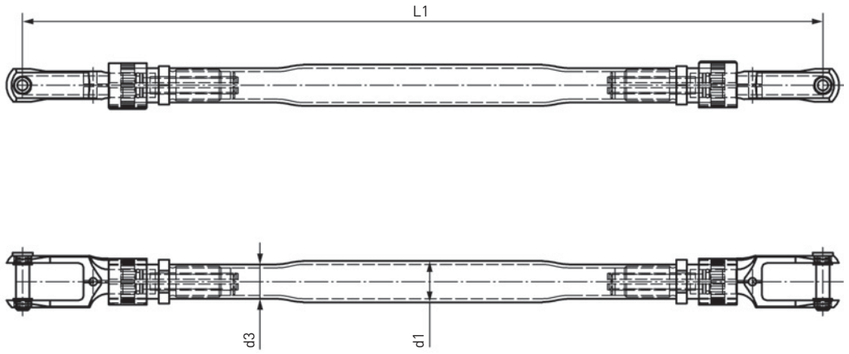

Figure 2 Assembly code E

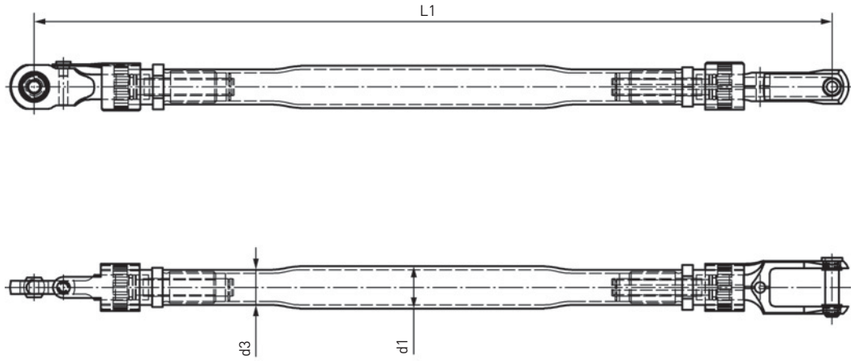

Figure 3 Assembly code F

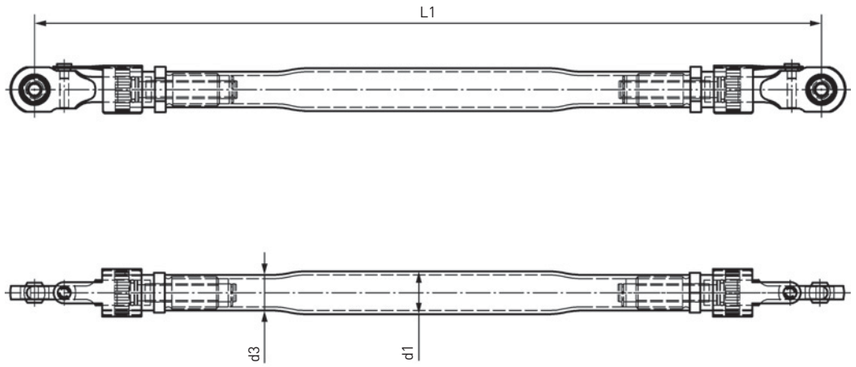

DESCRIPTION TO TIE RODS EN4694

Dimensions:

- For length 250 mm to 330 mm Diameter d1= ∅22,2 mm, d3=22,2 mm (no swaging).
- For length 330 mm to 900 mm Diameter d1= ∅25,4 mm, d3=22,2 mm
- Possible Length L1=250-900 mm in 5mm steps, Adjustable range ±12,7 mm,
- Example Length code: Length code 250mm = 0250

Material:

- Material Code A: Fork, eye ends out of Aluminum (WL 3.1354), Rod body out of Aluminum (WL 3.1354)
- Material Code B: Fork, eye ends out of Stainless steel (WL 1.4548.4), Rod body out of Aluminum (WL 3.1354)
- Material Code A and B: Bushing in fork ends out of Titanium alloy 3.7165 according to EN 3311

Compression loads:

Compression Loads Material Code A

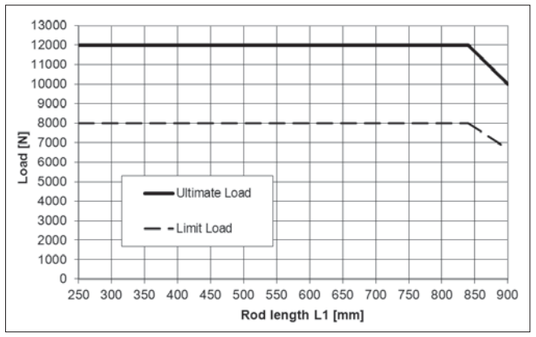

Compression Loads Material Code B

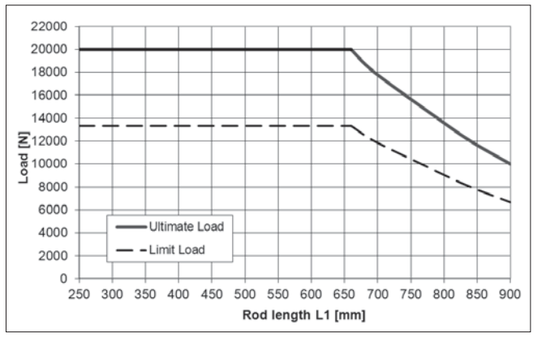

Fatigue loads:

Fatigue loads see EN4691

Surface Finish:

- Rod body: Anodized according to LN 9368-4-2000, coating according to LN 9368-7-5023 and according to LN 9368-7-5106
- Fork, eye ends Material Code A: Anodized according to LN 9368-4-2001
- Fork, eye ends Material Code B: Passivated according to ISO 8075

Tension loads:

	Material Code A [kN]	Material Code B (Pin diameter ∅6,35) [kN]	Material Code B (Pin diameter ∅7,938 and 9,525) [kN]
Ultimate load	20,0kN	36,0kN	40,0kN
Limit load	13,3kN	24,0kN	26,7kN

Size codes Fork ends:

Fork end with Clip code A

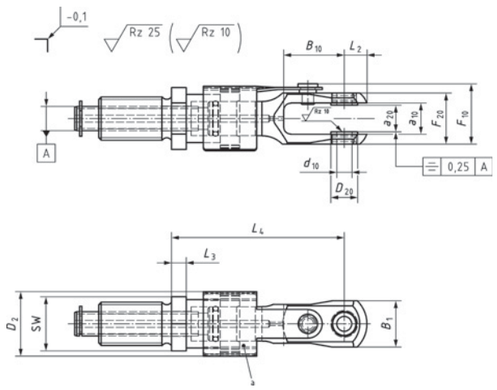

Fork end with Clip code B

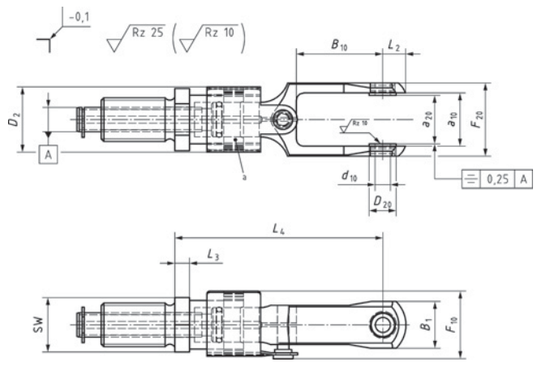

Fork end with Clip code B

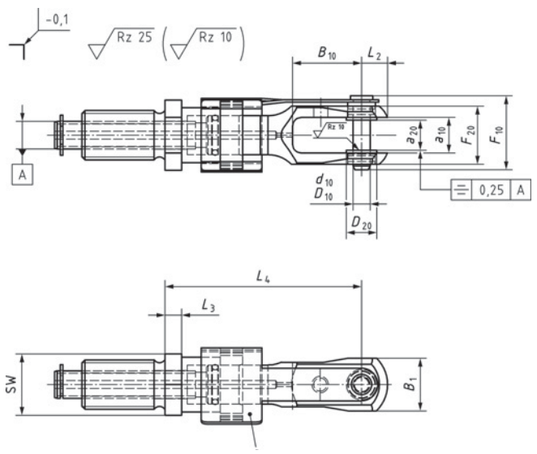

Fork end with Clip code B (R)ight

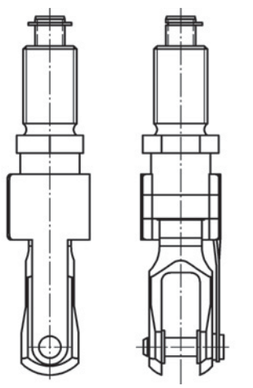

Fork end with Clip code B (L)eft

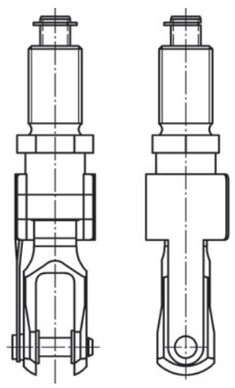

Table 3 Size codes and dimensions fork ends material code A and B, clip code A

all dimensions in mm

Size code	Clip code	a_{10}	a_{20} +0,1 0	B_1	B_{10} ±0,5	Ø D_2	Ø d_{10} 0 -0,013	Ø D_{20}	F_{10}	F_{20}	L_1	L_2	L_3	L_4	SW Hexagon spanner flat	Thread	Mass [g] ± 3 % Material code A	Mass [g] ± 3 % Material code B
01	A	13,1	8,72	19	25	26,8	6,350	11	24,8	21	250-900	9,5	6	71,0	22,2	RH	73	138
																LH		
02		11,0	9,10													RH	75	146
																LH		
03		13,1	11,1													RH	72	137
																LH		
04			11,2													RH	72	137
																LH		
05							7,938									RH	71	136
																LH		
06					30									76,0		RH	75	147
																LH		
07							6,350									RH	75	148
																LH		
08		13,7	12,7	21			9,525	13				10,3				RH	74	145
																LH		
09		16,1	14,2	19	25		6,350	11	27,8	24		9,5		71,0		RH	72	137
																LH		
10		22,5	20,6		35		7,938		28,3	30,4	270-900			84,4		RH	79	163
																LH		

Table 4 Size codes and dimensions fork ends material code A and B, clip code B

all dimensions in mm

Size code a*	Size code b**	Clip code	a_{10}	a_{20} +0,1 0	B_1	B_{10} ±0,5	Ø D_2	Ø d_{10} 0 -0,013	Ø D_{10} -0,038 -0,076	Ø D_{20}	F_{10}	F_{20}	L_1	L_2	L_3	L_4	SW Hexagon spanner flat	Thread	Mass [g] ± 3 % Material A	Mass [g] ± 3 % Material B
21	(31)	B	13,1	8,72	19	25	26,8	6,350	6,350	11	24,8	21	250-900	9,5	8	71,0	22,2	RH	80	145
																		LH		
22	(32)		11,0	9,10														RH	82	153
																		LH		
23	(33)		13,1	11,1														RH	79	144
																		LH		
24	(34)			11,2														RH	79	144
																		LH		
25	(35)							7,938	7,938									RH	81	146
																		LH		
26	(36)					30										76,0		RH	86	158
																		LH		
27	(37)							6,350	6,350									RH	83	156
																		LH		
28	(38)		13,7	12,7	21			9,525	9,525	13								RH	89	160
																		LH		
29	(39)		16,1	14,2	19	25		6,350	6,350	11	27,8	24		9,5		71,0		RH	79	144
																		LH		
30	(40)		22,5	20,6		35		7,938	7,938		28,3	30,4	270-900			84,4		RH	93	177
																		LH		

*a: Size code for fork end with locking clip R **b: Size code for fork end with locking clip L

Size codes eye ends:

Eye end with Clip code A

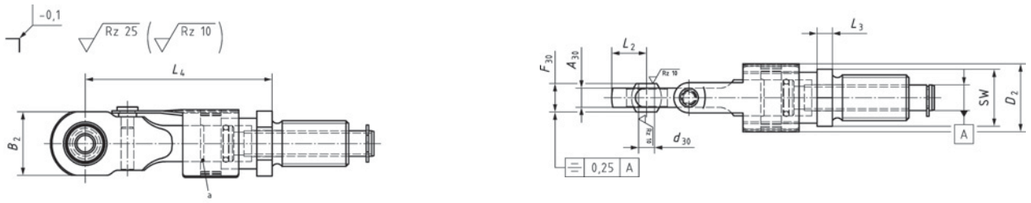

Table 5 Size codes and dimensions eye ends material code A and B, clip code A

all dimensions in mm

Size code	A_{30}	B_2	Ø D_2	Ø d_{30} 0 -0,013	F_{30} 0 -0,05	L_1	L_2	L_3	L_4	SW Hexagon spanner flat	Thread	Mass [g] ± 3 % Material code A	Mass [g] ± 3 % Material code B
41	8,31	25	26,8	6,350	11,1	250-900	13,6	8	72,4	22,22	RH	85	157
											LH		
42				7,938							RH	86	156
											LH		
43		30					16,1				RH	93	177
											LH		
44	10,31			9,525	12,7						RH	101	181
											LH		

Mass calculation:

For mass calculation with L_1 = 250 mm to 330 mm, see Equation (1) and Equation (2).
For mass calculation with L_1 = 330 mm to 900 mm, see Equation (1) and Equation (3).

(1) $h = L_1 - L_{4r} - L_{4l}$
(2) $m_t = 0{,}4886\ \text{g/mm} \times h + m_r + m_l$
(3) $m_t = 0{,}57\ \text{g/mm} \times (h - 140\ \text{mm}) + 68\ \text{g} + m_r + m_l$

h is the length of rod body (mm);
L_1 is the length of tie rod (mm), see Figure 1, Figure 2 and Figure 3;
L_{4r} is the length of fork / eye end – right side (mm), see Table 3, Table 4 and Table 5;
L_{4l} is the length of fork / eye end – left side (mm), see Table 3, Table 4 and Table 5;
m_r is the mass of fork / eye end – right side (g), see Table 3, Table 4 and Table 5;
m_l is the mass of fork / eye end – left side (g), see Table 3, Table 4 and Table 5;
m_t is the total mass (g).

Designation

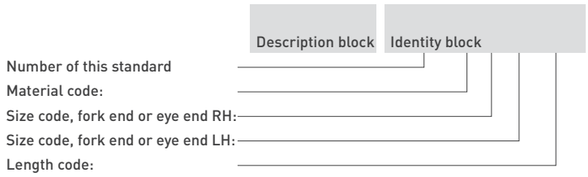

Technical Specification see EN4691

Components and their function

Rod end

Fork end

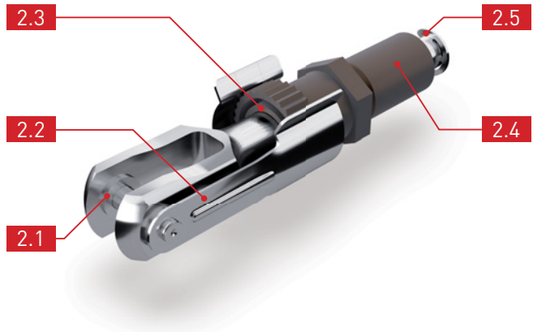

2.1

Bushes

- Aids better load transmission.
- Higher surface pressure possible.
- Through change of geometry
- (boring/width) modular structure with same geometry of fork possible.

2.2

Locking clip

Quick-locking mechanism for assembly by hand. Serves as anti-twist plate and aids in transmission of loads.

2.3

Rubber ring

Prevents penetration of water and dust into rod assembly.

2.4

Plastic insert

Aids in transmission of loads. Plastic prevents corrosion in thread and acts as an insulator.

2.5

Safety ring

Prevents and controls too far turning off the thread.

TIE ROD ACC. TO EN4694 GMT-NO. EN4694A28280325

Traceparts

DESCRIPTION TO TIE RODS EN4695

Patented design

Figure 1 Assembly code G

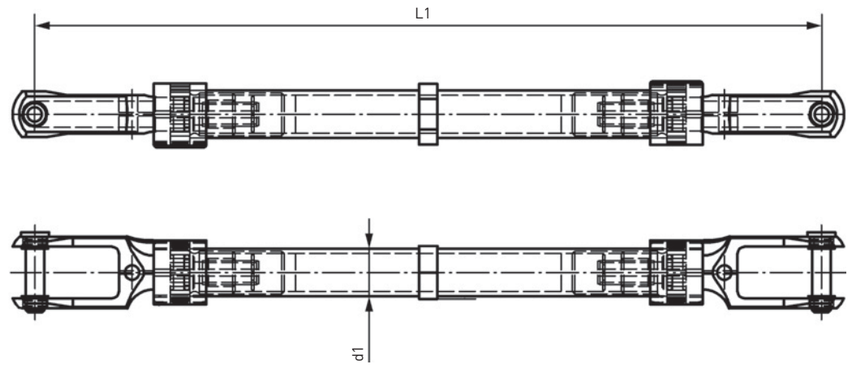

Figure 2 Assembly code H

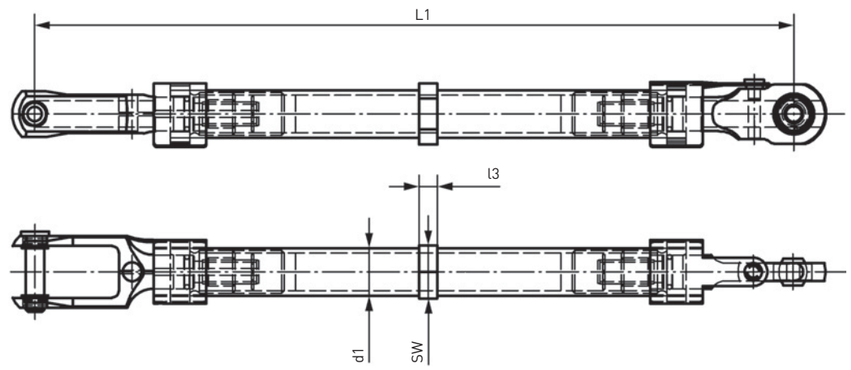

Figure 3 Assembly code K

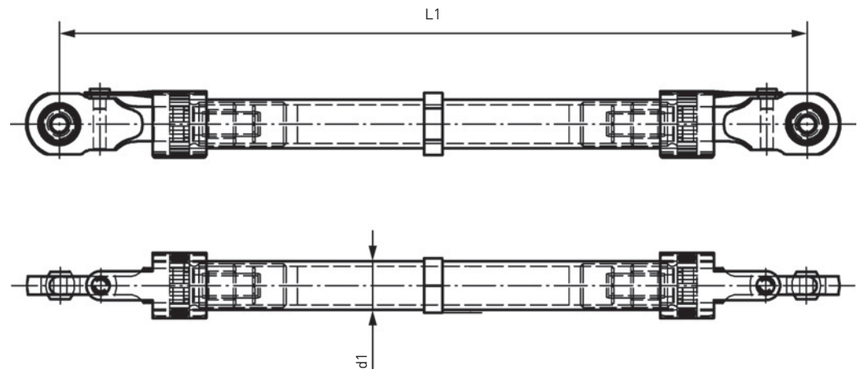

Dimensions:

- Diameter d1= ∅20mm, SW=22,2mm, l3= 8mm
- Possible Length L1=160-250mm in 5mm Steps, Adjustable range ±6,35mm
- Example Length code: Length code 160mm = 0160

Material:

- Material Code C = Fork, eye ends out of Stainless steel (WL 1.4548.4), Rod body out of Aluminum (WL 3.1354)
- Bushing in fork ends out of Titanium alloy 3.7165 according to EN 3311

Compression loads:

Compression Loads Material Code C

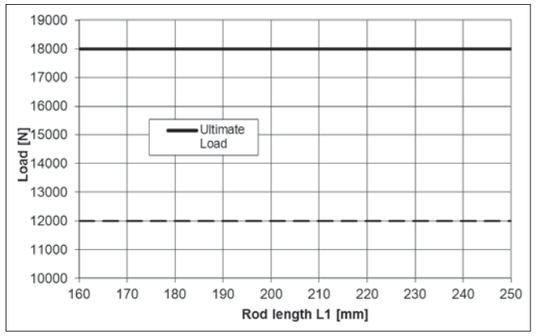

Surface Finish:

- Rod body: Anodized according to LN 9368-4-2000, coating according to LN 9368-7-5023 and according to LN 9368-7-5106
- Fork, eye ends Material Code C : Passivated according to ISO 8075

Tension loads:

- Material Code C
- Ultimate load= 20kN
- Limit load = 13,3kN

Fatigue loads:

Fatigue loads see EN4691

Size codes Fork ends:

Fork end with Clip code A

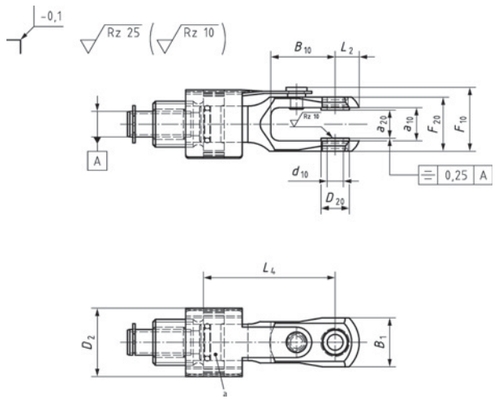

Fork end with Clip code A (only for size code 52)

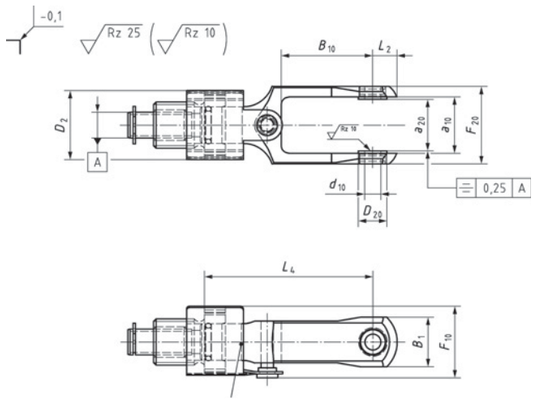

Fork end with Clip code B

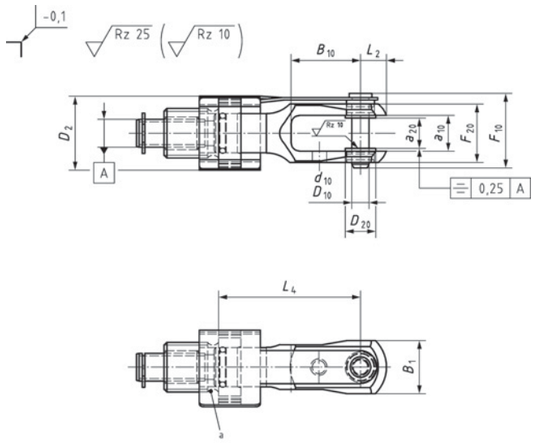

Fork end with Clip code B (R)ight

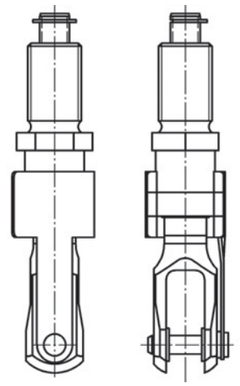

Fork end with Clip code B (L)eft

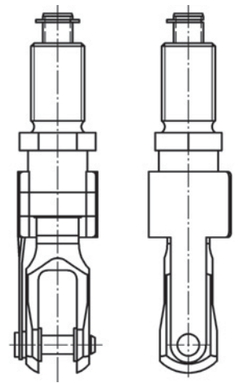

Table 2 Size codes and dimensions fork ends material code C, clip code A

all dimensions in mm

Size code	Clip code	a_{10}	a_{20} +0,1 0	B_1	B_{10} ±0,5	Ø D_2	Ø d_{10} 0 -0,013	Ø D_{20}	F_{10}	F_{20}	L_1	L_2	L_3	L_4	Thread	Mass [g] ± 3 %
50	A	13,1	8,72	19	25	26,8	6,350	11	24,8	21,0	160-250	9,5	8	51	RH	73
															LH	
51			11,20												RH	75
															LH	
52		22,5	20,60		35		7,938		28,3	30,4	180-250			64,4	RH	72
															LH	

Table 3 Size codes and dimensions fork ends material code C, clip code B

all dimensions in mm

Size code a*	Size code b**	Clip code	a_{10}	a_{20} +0,1 0	B_1	B_{10} ±0,5	Ø D_2	Ø d_{10} 0 -0,013	Ø D_{10} -0,038 -0,076	Ø D_{20}	F_{10}	F_{20}	L_1	L_2	L_3	L_4	Thread	Mass [g] ± 3 %
60	(70)	B	13,1	8,72	19	25	26,8	6,350	6,350	11	24,8	21,0	160-250	9,5	8	51	RH	125
																	LH	
61	(71)			11,20													RH	125
																	LH	
62	(72)		22,5	20,60		35		7,938	7,938		28,3	30,4	180-250			64,4	RH	156
																	LH	

*a: Size code for fork end with locking clip R **b: Size code for fork end with locking clip L

DESCRIPTION TO TIE RODS EN4695

Size codes eye ends:

Eye end with Clip code A

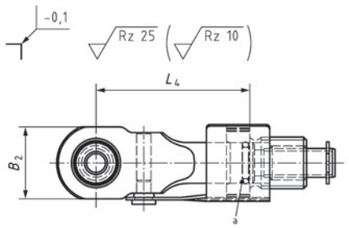

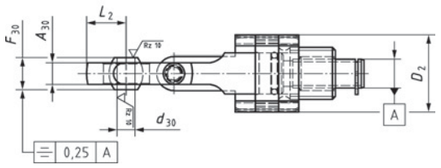

Table 1 Size codes and dimensions eye ends material code C, clip code A

all dimensions in mm

Size code	A_{30}	B_2	Ø D_2	Ø d_{30} 0 -0,013	F_{30} 0 -0,05	L_1	L_2	L_4	Thread	Mass [g] ± 3 %
80	8,31	25	26,8	6,350	11,1	160-250	13,6	53,9	RH LH	132

Mass calculation:

For mass calculation, see Equation (1) and Equation (2).

(1) $h = L_1 - L_{4r} - L_{4l}$
(2) $m_t = 0{,}3054\ g / mm \times (h - 8\ mm) + 5\ g + m_r + m_l$

h is the length of rod body (mm);
L_1 is the length of tie rod (mm), see Figure 1, Figure 2 and Figure 3;
L_{4r} is the length of fork / eye end – right side (mm), see Table 2, Table 3 and Table 4;
L_{4l} is the length of fork / eye end – left side (mm), see Table 2, Table 3 and Table 4;
m_r is the mass of fork / eye end – right side (g), see Table 2, Table 3 and Table 4;
m_l is the mass of fork / eye end – left side (g), see Table 2, Table 3 and Table 4;
m_t is the total mass (g).

Designation

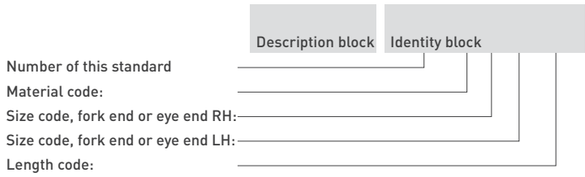

Technical Specification see EN4691

COMPONENTS OF TIE RODS EN4695

Components and their function

Rod end

Fork end

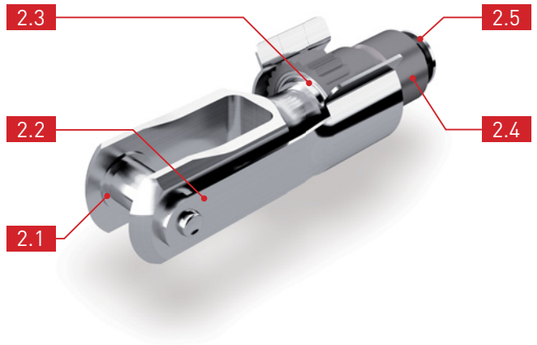

2.1

Bushes

- Aids better load transmission.
- Higher surface pressure possible.
- Through change of geometry
- (boring/width) modular structure with same geometry of fork possible.

2.4

Titan insert

Aids in transmission of loads. Titan prevents corrosion in thread.

2.2

Locking clip

Quick-locking mechanism for assembly by hand. Serves as anti-twist plate and aids in transmission of loads.

2.5

Safety ring

Prevents and controls too far turning off the thread.

2.3

Rubber ring

Prevents penetration of water and dust into rod assembly.

TIE ROD ACC. TO EN4695 GMT-NO.

Traceparts

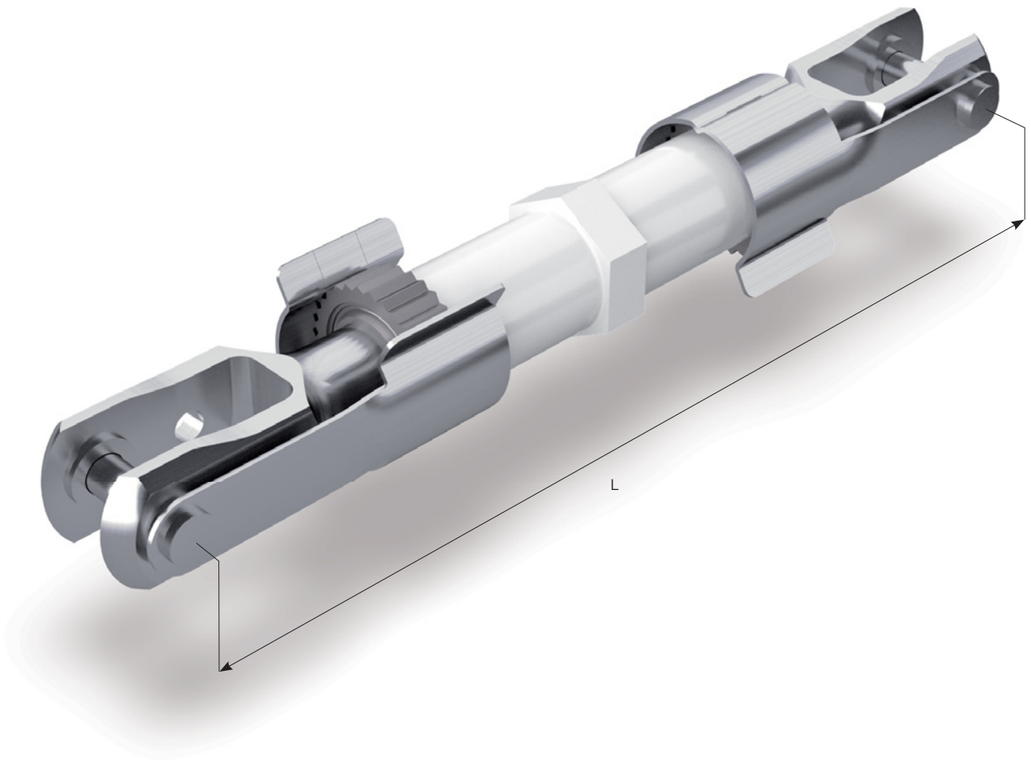

RUBBER METAL PARTS

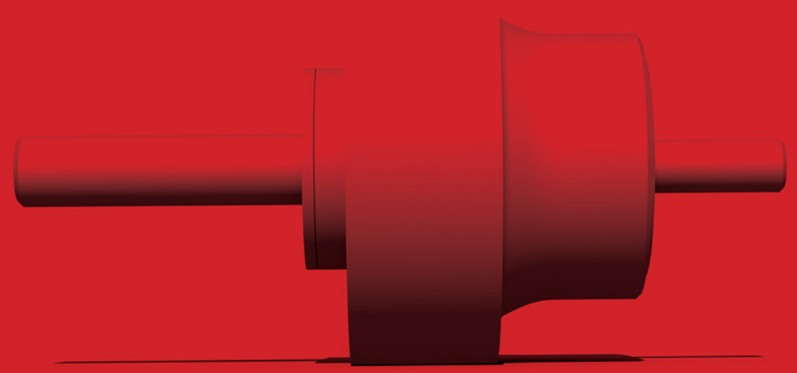

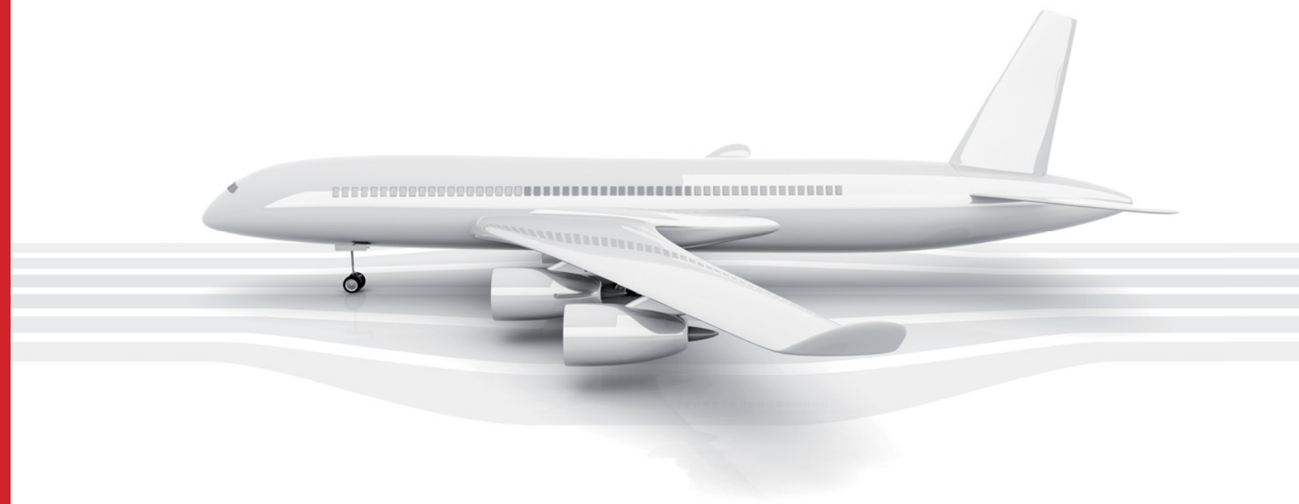

AIRBUS STANDARD

TABLE OF CONTENTS

→ ABS0756 52 - 57
→ ABS0757 58 - 59
→ ABS1067 Shock Mount 60 - 62
→ ABS1186 Shock Mount 63
→ ABS1212 Shock Mount 64
→ ABS2146 Shock Mount (color coding) 65
→ ABS2147 Shock Mount (with notch) 66
→ ABS2147 Shock Mount 67

DESCRIPTION TO SHOCK MOUNTS AIRBUS STANDARD

Mechanical vibrations and impact stress are the biggest problems for cabin interiors onboard aircrafts. Therefore very specific noise and vibration isolating systems have to be used to isolate interiors from vibrations.

GMT designs special purpose shockmounts offering high deflection whilst being able to absorb shock loads.

Mountings with incorporated rebound control features reduce excessive movement under shock loads.

Shockmounts are mainly used for interior and sub-structure applications (walls, galleys, lavatories, hat racks and other monuments).

Example of use

Mounting of overhead compartment A380 aircraft.

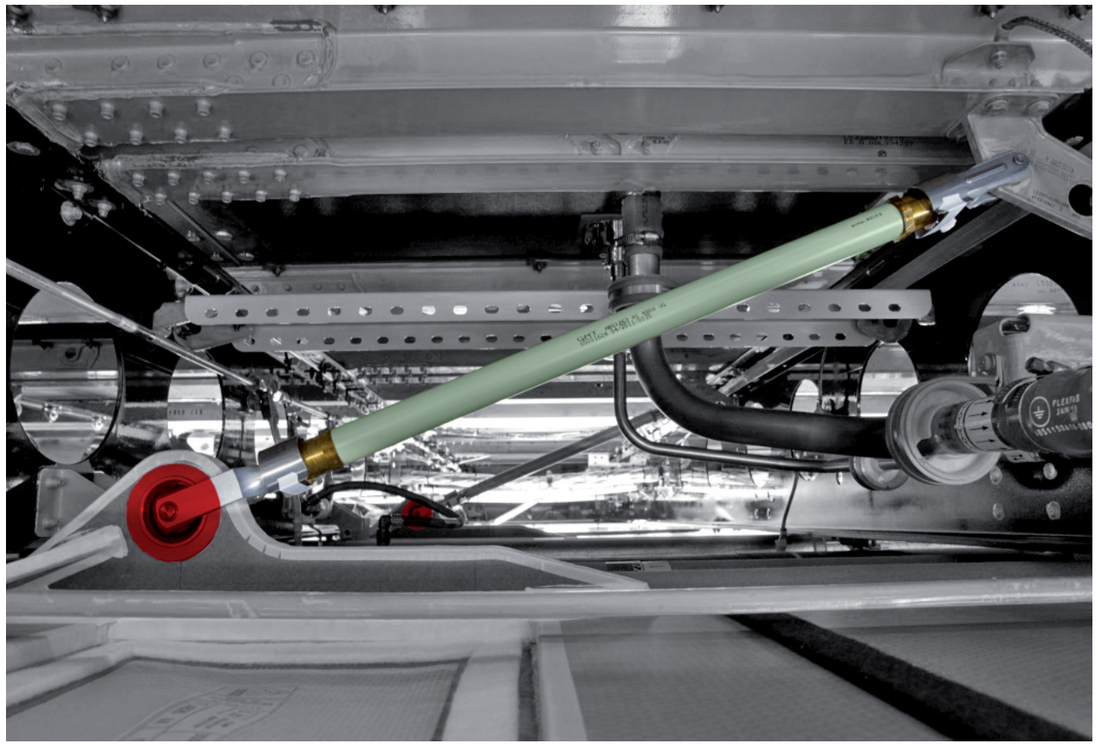

SHOCK MOUNTS ACC. TO ABS0756 GMT-NO. 42009901

Traceparts

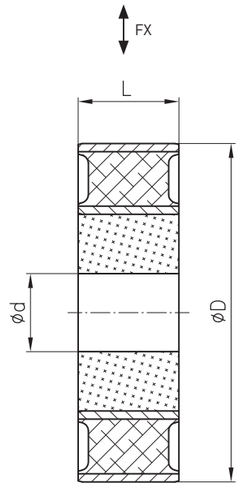

ABS-no.	GMT item number	Length L1 [mm]	Length L2 [mm]	Ø d [mm]	Ø D [mm]	Radial stiffness [N/mm]
ABS0756 A0 95M	420 09901	12.3-0.1	12.3-0.1	9.525-0.013	39.3	approx. 850

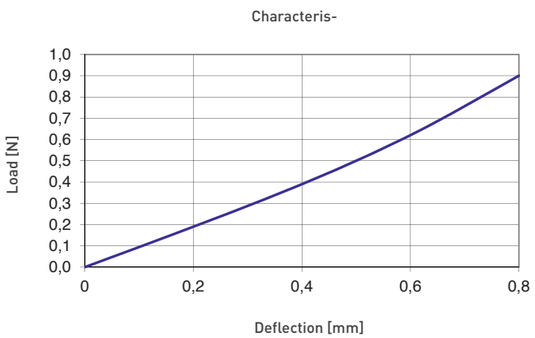

Example of use

Shockmounts are mainly used for interior and sub-structure applications (walls, galleys, lavatories, hat racks and other monuments).

Detailed technical information of all rubber metal parts acc. to ABS0756

Link to technical information:
qr.gmt-aerospace.com/products/abs0756

SHOCK MOUNTS ACC. TO ABS0756 GMT-NO. 42011101

Traceparts

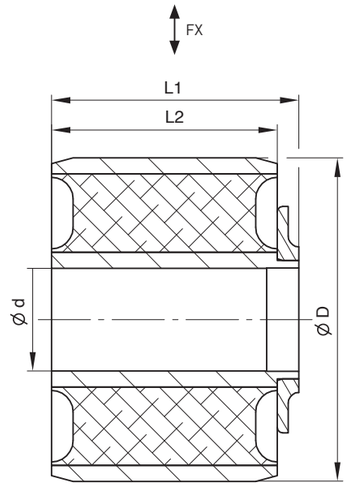

ABS-no.	GMT item number	Length L1 [mm]	Length L2 [mm]	Ø d [mm]	Ø D [mm]	Radial stiffness [N/mm]
ABS0756 A0 95M	420 11101	22.95	20.95±0.1	9.525+0.022	30 h7	approx. 1140

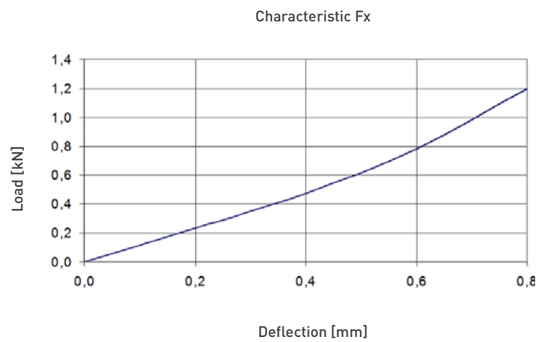

Example of use

Shockmounts are mainly used for interior and sub-structure applications (walls, galleys, lavatories, hat racks and other monuments).

Detailed technical information of all rubber metal parts acc. to ABS0756

Link to technical information:
qr.gmt-aerospace.com/products/abs0756

SHOCK MOUNTS ACC. TO ABS0756 GMT-NO. 41031001

Traceparts

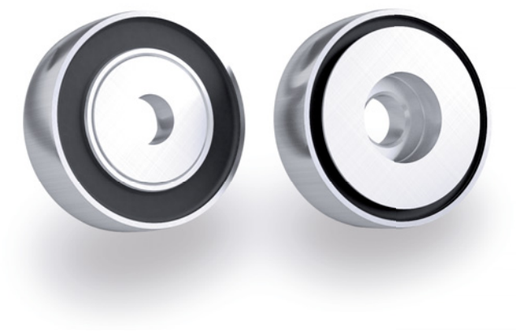

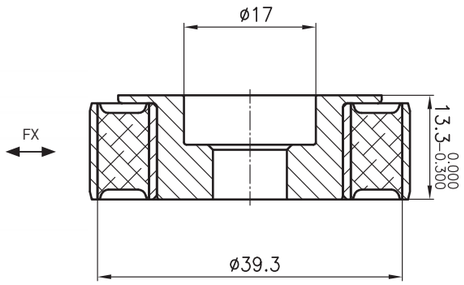

ABS-no.	GMT item number	Radial stiffness [N/mm]
ABS0756 A 095H	410 31001	approx. 850

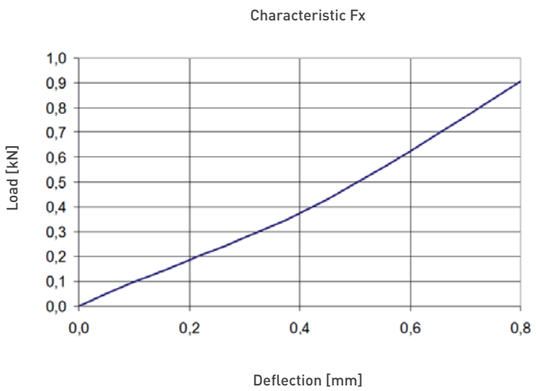

Example of use

Shockmounts are mainly used for interior and sub-structure applications (walls, galleys, lavatories, hat racks and other monuments).

Detailed technical information of all rubber metal parts acc. to ABS0756

Link to technical information:
qr.gmt-aerospace.com/products/abs0756

SHOCK MOUNTS ACC. TO ABS0756 GMT-NO. 41031301

Traceparts

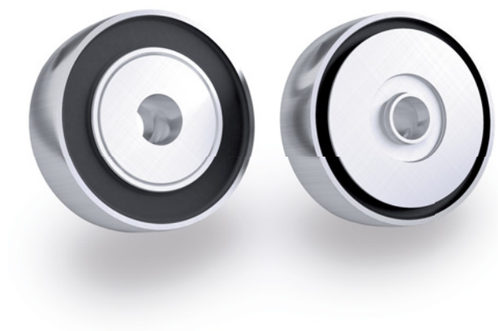

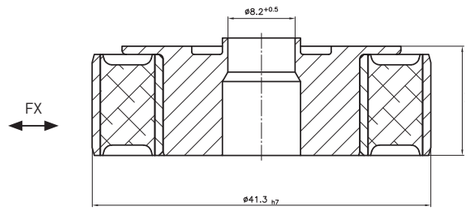

ABS-no.	GMT item number	Radial stiffness [N/mm]
ABS0756 A 082H	410 31301	approx. 850

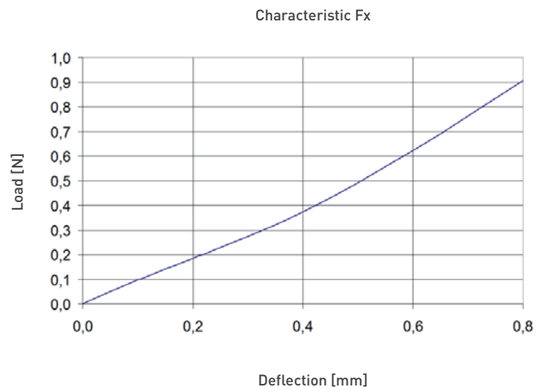

Example of use

Shockmounts are mainly used for interior and sub-structure applications (walls, galleys, lavatories, hat racks and other monuments).

Detailed technical information of all rubber metal parts acc. to ABS0756

Link to technical information:
qr.gmt-aerospace.com/products/abs0756

SHOCK MOUNTS ACC. TO ABS0756 GMT-NO. 64003601, 64003701

Traceparts

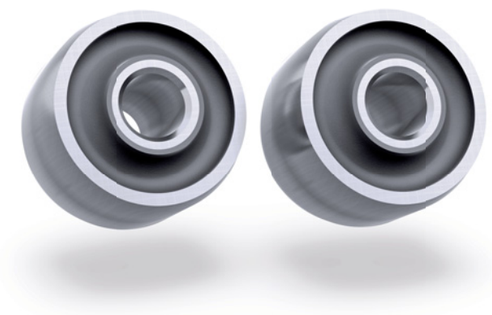

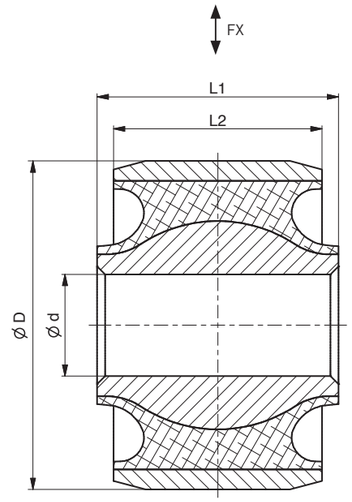

ABS-no.	GMT item number	Length L1 [mm]	Length L2 [mm]	Ø d [mm]	Ø D [mm]	Radial stiffness [N/mm]
ABS0756 SM756000	640 03601	20.65-0.05	18±0.2	9.52-0,013	31.5 h7	31.5 h7
ABS0756 SM756000	640 03701	15.06 -0.05	13±0.2	6.35-0.013	20.5 h7	20.5 h7

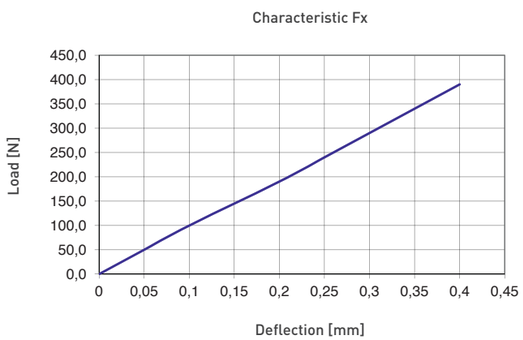

Example of use

Shockmounts are mainly used for interior and sub-structure applications (walls, galleys, lavatories, hat racks and other monuments).

Detailed technical information of all rubber metal parts acc. to ABS0756

Link to technical information:
qr.gmt-aerospace.com/products/abs0756

SHOCK MOUNTS ACC. TO ABS0756 GMT-NO. 42009103

Traceparts

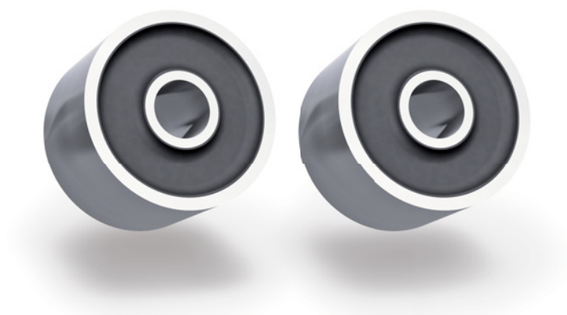

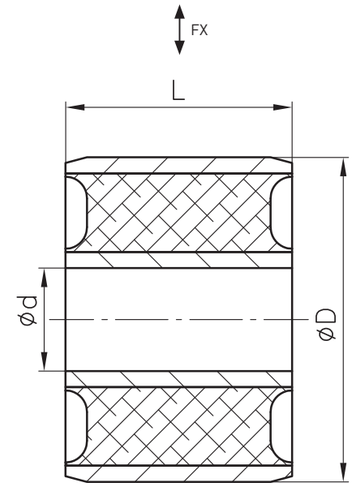

ABS-no.	GMT item number	Length L1 [mm]	Length L2 [mm]	Ø d [mm]	Ø D [mm]	Radial stiffness [N/mm]
ABS0756 A0 95M	420 09101	20.95±0.3	20.95±0.3	9.525-0.013	30 h7	

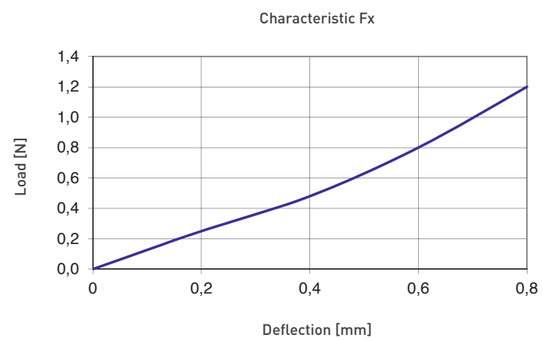

Example of use

Shockmounts are mainly used for interior and sub-structure applications (walls, galleys, lavatories, hat racks and other monuments).

Detailed technical information of all rubber metal parts acc. to ABS0756

Link to technical information:
qr.gmt-aerospace.com/products/abs0756

SHOCK MOUNTS ACC. TO ABS0757 GMT-NO. 42009501

Traceparts

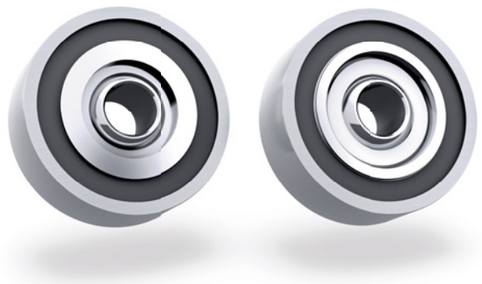

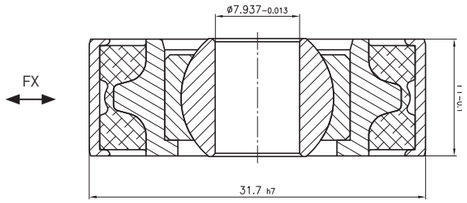

ABS-no.	GMT item number	Radial stiffness [N/mm]
ABS0757 A071	420 09501	approx. 850

Characteristic Fx

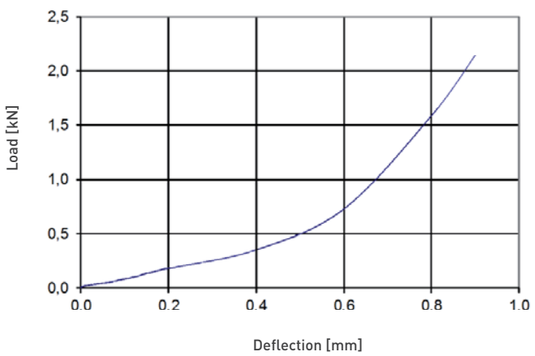

Example of use

Shockmounts are mainly used for interior and sub-structure applications (walls, galleys, lavatories, hat racks and other monuments).

Detailed technical information of rubber metal parts acc. to ABS0757

Link to technical information:
qr.gmt-aerospace.com/products/abs0757

SHOCK MOUNTS ACC. TO ABS0757 GMT-NO. 42009801

Traceparts

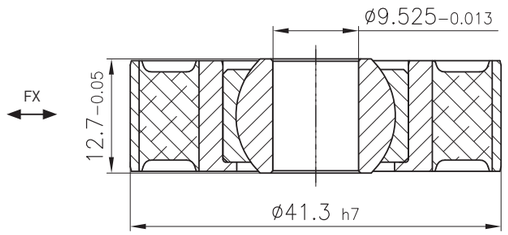

ABS-no.	GMT item number	Radial stiffness [N/mm]
ABS0757 A 091	420 09801	approx. 850

Characteristic Fx

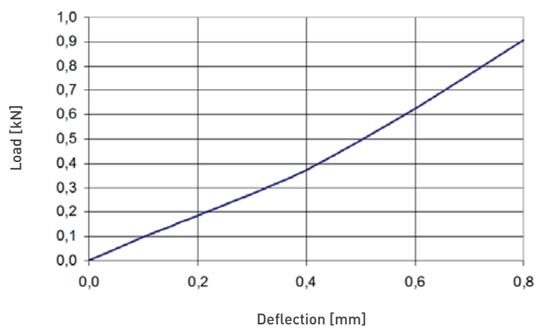

Example of use

Shockmounts are mainly used for interior and sub-structure applications (walls, galleys, lavatories, hat racks and other monuments).

Detailed technical information of rubber metal parts acc. to ABS0757

Link to technical information:
qr.gmt-aerospace.com/products/abs0757

SHOCK MOUNTS ACC. TO ABS1067 GMT-NO. 42007601

Traceparts

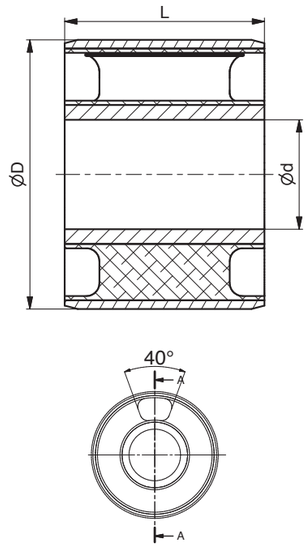

ABS-no.	GMT item number	Length L1 [mm]	Ø d [mm]	Ø D [mm]
ABS1067	420 07601	23-0.1	12.8 H7	31 r6

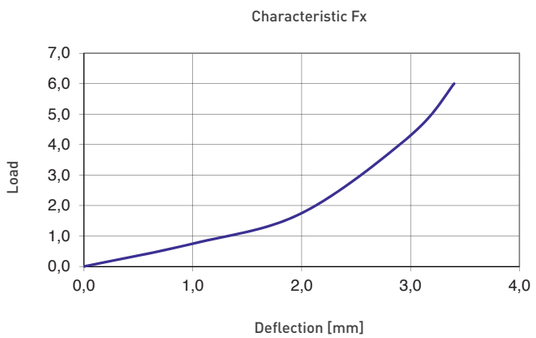

Link to technical information:
qr.gmt-aerospace.com/products/abs1067-shock-mount

SHOCK MOUNTS ACC. TO ABS1067 GMT-NO. 42007701

Traceparts

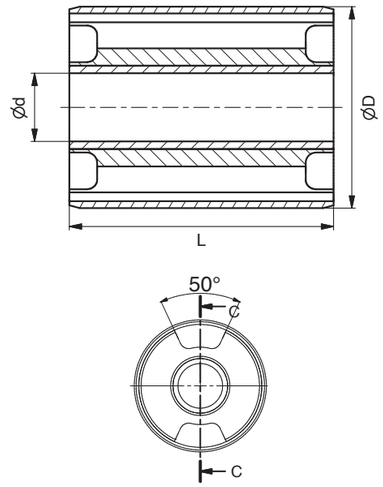

ABS-no.	GMT item number	Length L1 [mm]	Ø d [mm]	Ø D [mm]
ABS1067	420 07701	38-0.1	9.8 H7	29 r6

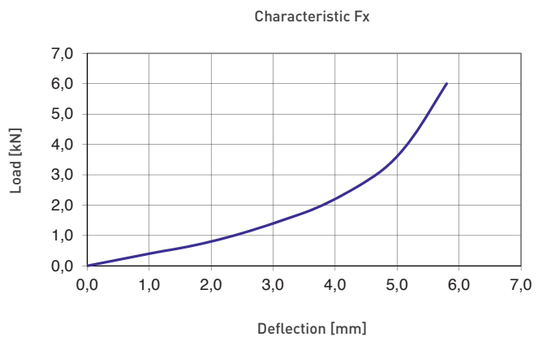

Link to technical information:
qr.gmt-aerospace.com/products/abs1067-shock-mount

SHOCK MOUNTS ACC. TO ABS1067 GMT-NO. 42007501

Traceparts

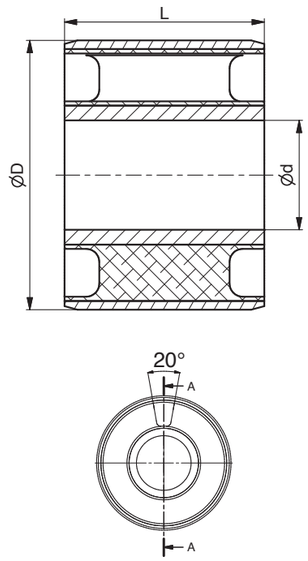

ABS-no.	GMT item number	Length L1 [mm]	Ø d [mm]	Ø D [mm]
ABS1067	420 07501	23-0.1	9.8 H7	29 r6

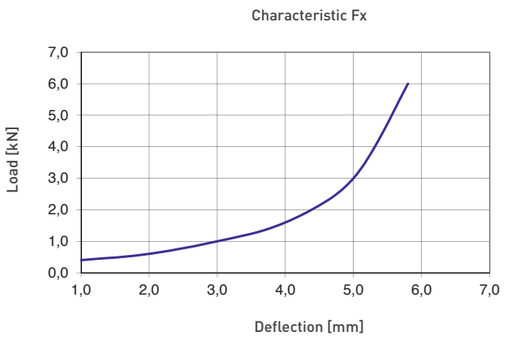

Link to technical information:
qr.gmt-aerospace.com/products/abs1067-shock-mount

SHOCK MOUNTS ACC. TO ABS1186 GMT-NO. 592057..

Traceparts

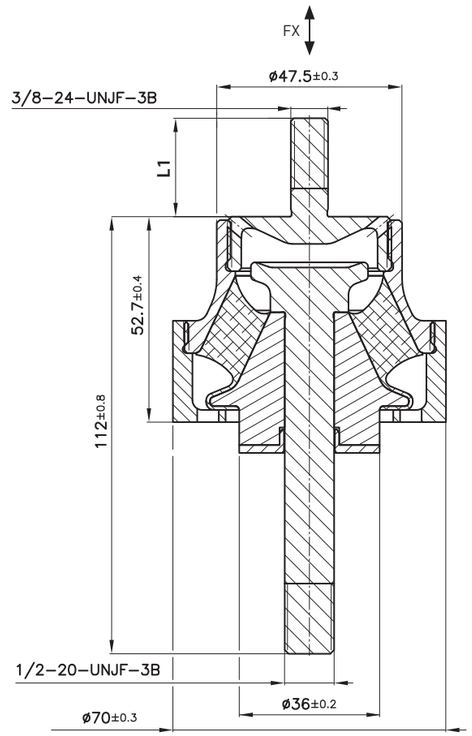

Link to technical information:
qr.gmt-aerospace.com/products/abs1186-shock-mount/592057

ABS-no.	GMT item number	Weight [g]	Length L1 [mm] [±0,2]
ABS1186 A252 K1	59205701	472	25,2
ABS1186 B272 K1	59205702	473	27,2
ABS1186 A280 K1	59205703	474	28

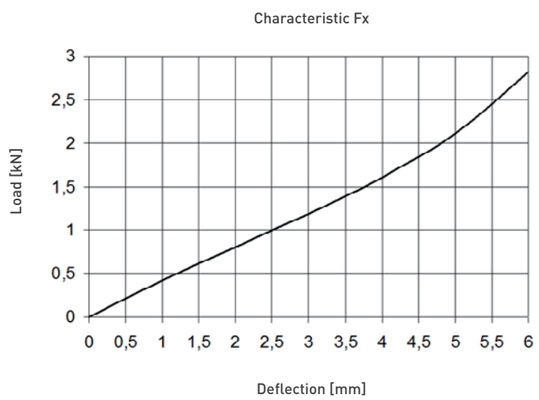

Example of use

Mounting of components for interior fittings of the cabin. To provide the crew members the opportunity of a restorative sleep in the cabin crew rest compartment, it is necessary to keep the noise inside a plane on the lowest possible level. Rubber metal parts are particularly convenient for this purpose as they strongly reduce the acoustic noise generated by the jet engines as well as flow-generated noise.

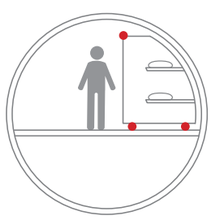

SHOCK MOUNTS ACC. TO ABS1212 GMT-NO. 65003401

Traceparts

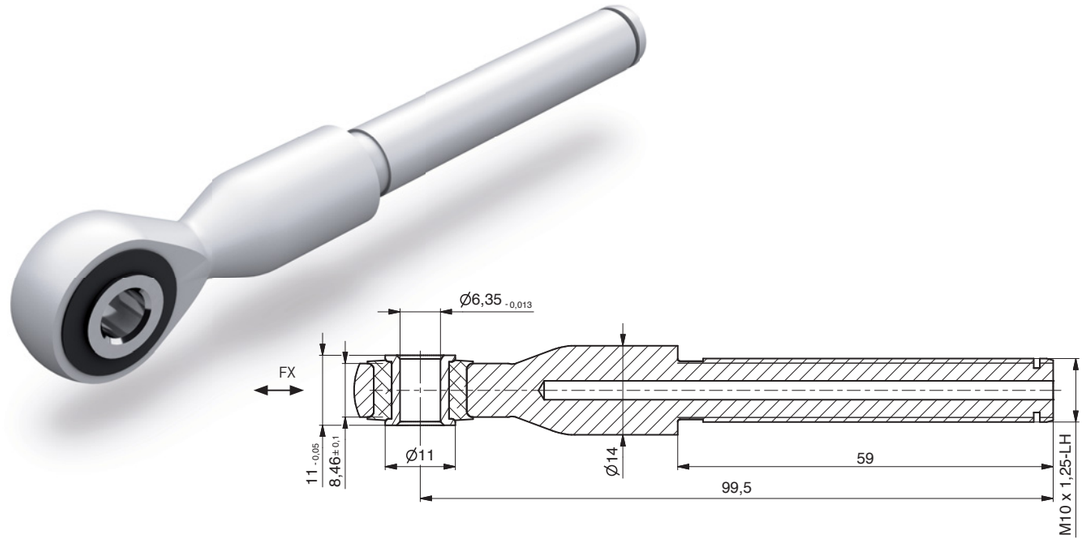

ABS-no.	GMT-no.	Weight [g]	Length [mm]
ABS1212 A 01	65003401	29,331	99,5

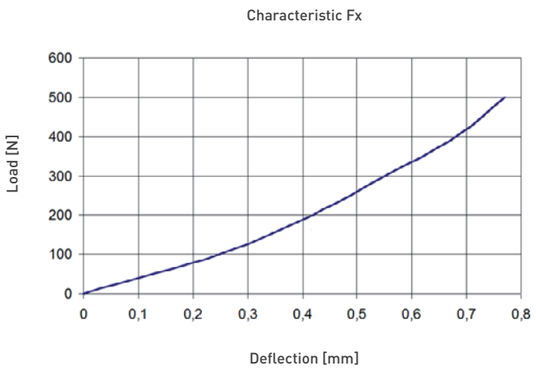

Example of use

Rod end of tie rod ABS 1263 and ABS 1188. Mounting of sidewall panels in the cabin of A380 aircraft.

Link to technical information:
qr.gmt-aerospace.com/products/abs1212-shock-mount/65003401

SHOCK MOUNTS ACC. TO ABS2146 (COLOR CODING) GMT-NO. 96055502

Traceparts

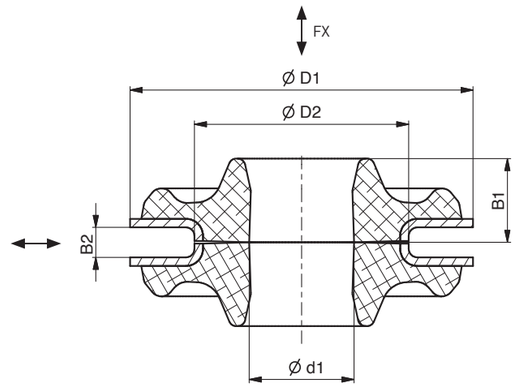

ABS-no.	GMT-no.	Weight [g]	Ø D1	Ø D2 [+0,1 -0,05]	Ø d1	B1 [+0,2 -0,1]	B2
ABS2146 L 040 A	96055502	3,22	20	12,5	6,12	4,9	1,75

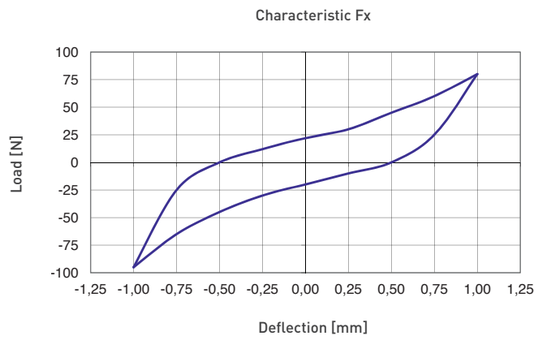

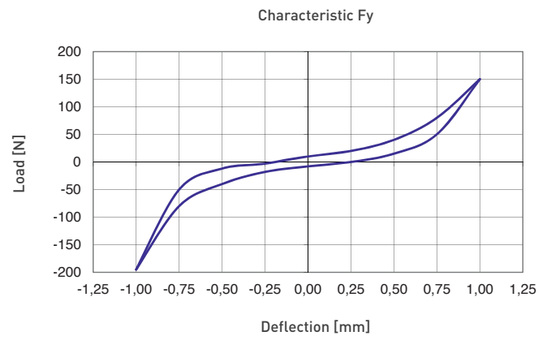

Example of use

Mounting of sidewall and ceiling panels in the cabin of A350XWB aircraft.

Link to technical information:
qr.gmt-aerospace.com/products/abs2146-shock-mount-color-coding/960555

SHOCK MOUNTS ACC. TO ABS2147 GMT-NO. 42016501

Traceparts

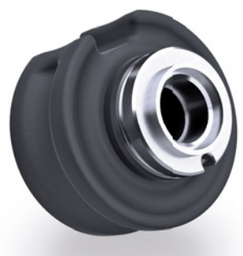

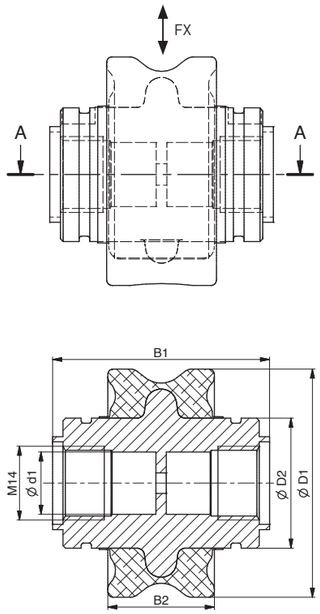

ABS-no.	GMT-no.	Weight [g]	Ø D1	Ø D2	d1 [+0,1]	B1 [±0,1]	B2
ABS2147D01C05	42016501	147,7	44,2	25,7	12,05	42	20,6

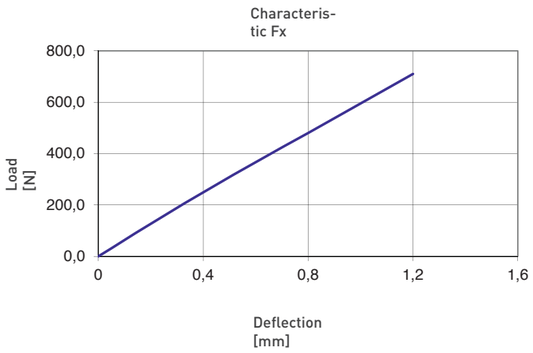

Detailed technical information of shock mounts acc. to ABS 2147

Link to technical information:
qr.gmt-aerospace.com/products/abs2147-shock-mount-with-notch/42016501

SHOCK MOUNTS ACC. TO ABS2147 GMT-NO. 42017501

Traceparts

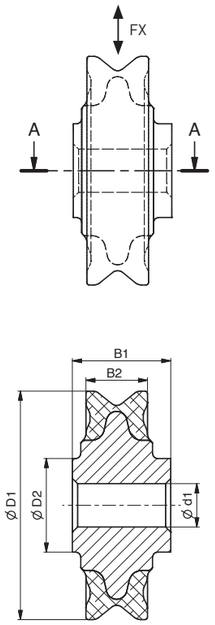

ABS-no.	GMT-no.	Weight [g]	Ø D1	Ø D2 [+0,1]	d1 [+0,04 -0,02]	B1	B2
ABS2147-SM2147A03A02	42017501	33,801	43,9	18	8,3	18,9	11,85

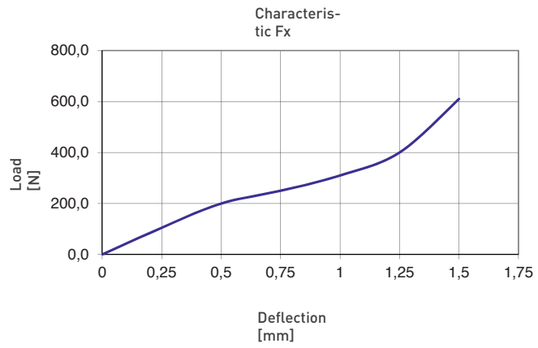

Link to technical information:
qr.gmt-aerospace.com/products/abs2147-shock-mount/42017501

EN SHOCK MOUNTS WITH BUSHES

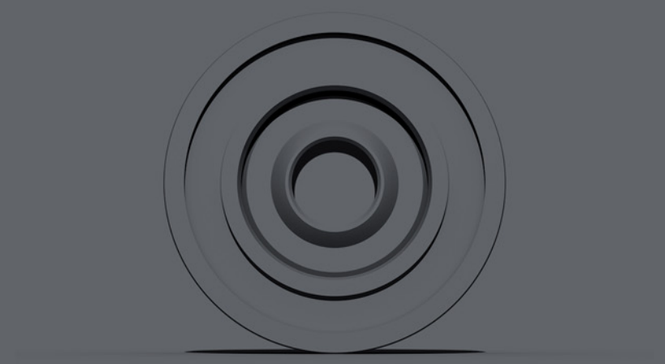

TABLE OF CONTENTS

→ EN4841 69

EN STANDARD SOON AVAILABLE

CONTACT

Gummi · Metall · Technik

Customer Support Europe:
Headquarter Germany
sales-aircraft@gmt-aerospace.com
Phone: +49 7223 804-604
Fax: +49 7223 80488-604
www.gmt-aerospace.com

www.gmt-aerospace.com

www.gmt-aerospace.com